JMA DAS Platform

Master Unit Installation Guide

Document Version: 5

Date: February 2024

Legal Notices

© 2024 John Mezzalingua Associates, LLC dba JMA Wireless. All rights reserved.

This document may contain confidential and/or proprietary information. All company names, brands, and logos are trademarks of holders JMA Wireless or its affiliates. All specifications are subject to change without notice.

World Headquarters

JMA Wireless

140 Cortland Ave.

Syracuse, NY 13202

+1 888 201-6073

customerservice@jmawireless.com

For additional contact information, see the JMA Wireless website:

jmawireless.com

Table of Contents

1 - About this Guide **6**
1.1 - What's New 6
2 - Overview of the JMA DAS Platform **7**
3 - Components **8**
3.1 - Signal Source Interfaces 10
3.1.1 - TCPRIPOI 10
3.1.2 - TDTPOI 11
3.1.3 - TAPOI 14
3.1.4 - TLPPOI 15
3.1.5 - TDPX 16
3.1.6 - TDFE 17
3.2 - Capacity management 19
3.2.1 - TCM3-4 Capacity Manager Matrix (3x4) 19
3.2.2 - TSW4 Configurable RF Switch 20
3.3 - RF Distribution, Filtering, and Time Synchronization 21
3.3.1 - Splitter/Combiner 21
3.3.2 - Multiplexers 22
3.3.3 - Master Band Combiners 28
3.3.4 - TDD Synchronizer and Reference Module 29
3.4 - Optical Interfaces 30
3.4.1 - TTR Plug-in Optical Modules 30
3.4.2 - Next Generation Optical Transceivers 35
3.4.3 - Point-to-Point Link 38
3.5 - Coverage Extension and Capacity Distribution 46
3.5.1 - TSFE 46
3.6 - Control and Management 48
3.6.1 - TSPV 48
3.6.2 - TEA-I16 50
3.7 - Power Supply 51
3.7.1 - TPSU/AC and TPSU/48 51
3.7.2 - SUB-PSUN-MU and SUB-PSUN-MU/48 53
3.7.3 - Remote Power Supply Distributor 56
3.8 - Sub-racks for the Installation of Plug-in Components 60
3.9 - Forced-air Cooling Unit 62
4 - Procedures **63**
4.1 - Installing the Master Unit DAS Components 65

This document contains JMA Wireless proprietary and/or confidential information.

4.1.1 - Installation Site Requirements 65
4.1.2 - Precaution and Warning Statements 65
4.1.3 - Installing Master Unit DAS Components inside the Rack Cabinet 67
4.1.4 - Installing Master Unit Plug-in Modules Inside Sub-racks 70
4.2 - Connecting the Master Unit DAS Components 72
4.2.1 - Precaution and Warning Statements 72
4.2.2 - Connecting RF Cables 73
4.2.3 - Connecting RS485 Communication Cables 74
4.2.4 - Connecting Optical Components 76
4.2.5 - Connecting the TCPRIPOI Module to the XRAN Server 86
4.2.6 - Connecting Internal DC Power Supply 88
4.2.7 - Connecting External AC Power Supply 91
4.2.8 - Connecting External DC Power Supply 94
4.2.9 - Connecting External Alarms 98
4.3 - Switching on the Master Unit 99
4.4 - Setting Up and Managing the DAS 99
4.5 - Performing Preventive Maintenance 100
4.5.1 - Optical Fiber 100
4.5.2 - Optical Connectors 100
4.6 - Replacing Faulty Components 102
4.6.1 - Replacing Faulty Plug-in Modules 102
4.6.2 - Replacing the Next Generation Optical Transceiver and Point-to- Point Components Fan Unit 103
4.6.3 - Replacing the TDFE Fan Kit 105
4.6.4 - Replacing Faulty TPSU/AC-30-1K and TPSU/48-30-1K 107
4.6.5 - Replacing Faulty TRPSU/AC-58-1.2k and TRPSU/48-58-2k 108
5 - Compliance with the Technical Regulatory Standards 110
5.1 - Compliance with the EU and UK Regulatory Requirements 110
5.1.1 - EU Directive 2014/53/EU – RED (Radio Equipment Directive) and Radio Equipment Regulations 2017 (S.I. 2017/1206) 110
5.1.2 - EU Directive 2015/863/EU – RoHS (Restriction of the Use of certain Hazardous Substances) 112
5.1.3 - EU Directive 2012/19/EU – WEEE (Waste Electrical and Electronic Equipment) 112
5.1.4 - Packaging and Packaging Waste Directive 94/62/EC and Subsequent Amendments 112
5.2 - Compliance with FCC Rules and Regulations 113
5.2.1 - Radio Equipment Operating Frequency Bands: Commercial Bands 114
5.3 - Industry Canada Compliance 115
6 - Attachments 118
6.1 - Getting Help: Technical Support Contact Information 118

This document contains JMA Wireless proprietary and/or confidential information.

6.2 - Technical Specifications 119
6.3 - Safety Rules 120
6.3.1 - Annex 122
6.4 - Warnings and Caution Statements 124
6.5 - Règles de sécurité 129
6.5.1 - Annexe 131
6.6 - Mises en Garde et Déclarations de Précaution 133
6.7 - Symbols and Manufacture Labels Affixed to the Product 138
Abbreviations 140

This document contains JMA Wireless proprietary and/or confidential information.

1 - About this Guide

Due to the increasing number of the JMA DAS Platform components, the information contained in the *DAS Platform Technical Handbook* has been divided into three documents:

- *JMA DAS Platform Master Unit Installation Guide*
- *JMA DAS Platform Remote Units Installation Guide*
- *JMA DAS Platform Next Generation Remote Units Installation Guide*

This document, *JMA DAS Platform Master Unit Installation Guide*, describes the DAS Platform master unit.

The **Components** section includes descriptions of the physical interfaces of all the components of the rack-based modular master unit.

The **Procedures** section provides instructions to safely install, connect, power up, and perform preventive maintenance and replacement of the master unit components.

1.1 - What's New

This revision (rev. 5) of the *JMA DAS Platform Master Unit Installation Guide* introduces the following new next generation DAS components:

- ED35ID, next generation optical transceiver, which operates in the 3400–3800MHz (35I) frequency band. See "Next Generation Optical Transceivers" on page 35 and "Connecting the Next Generation Optical Transceiver to the Next Generation Remote Units" on page 79.
- ED35IDM and ED35IDS, next generation Master and Secondary Point-to-Point rack-mount units, which operate in the 3400–3800MHz (35I) frequency band. See "Point-to-Point Link" on page 38", Connecting Next Generation Point-to-Point Components Using the Optional ED-PTP-KIT" on page 82, and "Connecting Next Generation Point-to-Point Components to the JMA TFO-MUX/DEMUX (Dense Wavelength Multiplexers/Demultiplexers) using the Optional DWDM Kits" on page 83.
- ED-PTP-KIT, optional kit, which replaces the ED-OPT-KIT when connecting Master and Secondary Point-to-Point components. See "Connecting Next Generation Point-to-Point Components Using the Optional ED-PTP-KIT" on page 82.

This document contains JMA Wireless proprietary and/or confidential information.

2 - Overview of the JMA DAS Platform

The JMA DAS Platform is a multi-band, multi-operator architecture that provides a wide range of flexible and reliable solutions for cellular coverage and capacity distribution. The components of the JMA Platform can be assembled to configure optical DAS, RF repeaters, and integrated solutions.

Optical DAS

Each Optical DAS is made up of two main elements, a **master unit** and **remote units**, connected with single mode optical fiber to distribute multiple frequency bands and multiple Carriers/MNOs to each remote unit, or multiple remote units to configure multipath (e.g. MIMO) configurations.

The **master unit** is a rack-based modular platform that allows configurations for different needs and a future-proof design. It is connected to the signal source and hosts the supervision module for the management of the DAS components.

Remote units (RUs) are distributed throughout the territory to be served. RUs are self-contained and provide signal distribution to a range of both indoor and outdoor antennas. A single master unit supports all classes of RUs, from low power to ultra high power.

RF Repeaters

The master unit can be configured for RF repeater applications which do not involve fiber links.
JMA RF repeaters can be set up combining Donor Front Ends (TDFE) and service front-ends (TSFE). Up to four Donor Front Ends can be connected to a single Service Front End to provide a single-band, four-operator off-air repeater.

No physical connections are required between the RF repeaters and the cellular network. RF repeaters use a directional antenna as interface to the operator’s donor BS and one or more service antennas to transmit the amplified wireless signal to the area to be covered.

When RF repeaters do not provide satisfactory coverage (extensive areas, long tunnels), they can be used along with an optical DAS.

This document contains JMA Wireless proprietary and/or confidential information.

3 - Components

This section provides detailed descriptions of the JMA DAS Platform components. The components are grouped into the following categories, based on their function:

- **Signal Source Interfaces: Points of Interface**
  - TCPRIPOI – CPRI Point of Interface. See page 10.
  - TDTPOI – DAS Tray Point of Interface. See page 11.
  - TAPOI – Active Point of Interface. See page 14.
  - TLPPOI – Low Power Point of Interface. See page 15.
  - TDPX – MIMO Passive Duplexer. See page 16.
  - TDFE – Digital Donor Front End. See page 17.
- **Capacity Management**
  - TCM3-4 Capacity Manager Matrix (3x4). See page 19.
  - TSW4 Configurable RF Switch. See page 20.
- **RF Distribution, Filtering, and Time Synchronization**
  - Splitter/Combiner. See page 21.
  - Multiplexers. See page 22.
  - Master Band Combiners. See page 28.
  - TDD Synchronizer and Reference Module. See page 29.
- **Optical Interfaces**
  - TTRU1W-S-M, TTRU2W-S-M, TTRU4W-S-M – Plug-in optical transceivers. See page 30.
  - TTRX24W-S-M – Plug-in MIMO 2x2 optical transceiver. See page 33.
  - TTRU2W-S-M-C2 – Plug-in optical transceiver for JMA cascade solutions. See page 32.
  - Next Generation Optical Transceivers – MIMO 2x2 optical transceivers, providing the optical interface towards next generation MIMO remote units. See page 35.
  - Point-to-Point Link – Optical Point-to-Point link between the master unit RF interface components and distant optical transceivers, installed in remote locations. See page 38.
- **Coverage Extension and Capacity Distribution**
  - TSFE – Service Front End, master unit rack-mount unit. Single-band/multi-operator interface towards a Service Antenna. See page 46.
  - Remote Units – Multi-carrier equipment connected to the master unit optical components and used in optical DAS to distribute wireless signal throughout the area to be covered.
    For detailed descriptions of remote units refer to the following guides:
    - *JMA DAS Platform Remote Units Installation Guide*
    - *JMA DAS Platform Next Generation Remote Units Installation Guide*
- **Control and Management**
  - TSPV – Supervision module for control and management of the DAS components.
    See page 48.

This document contains JMA Wireless proprietary and/or confidential information.

  - TEA-I16 – Additional alarm module used to increase the number of supported external alarms. See page 50.
- **Power Supply**
  - TPSU/AC and TPSU/48 – Power supply plug-in modules. See page 51.
  - SUB-PSUN-MU and SUB-PSUN-MU/48 – Space efficient AC-to-DC and DC-to-DC power supply units. See page 53.
  - Remote Power Supply Distributor – Power supply distribution system for the remote powering of JMA 48Vdc remote units with up-to-2W output power. See page 56.
- **Sub-racks for the Installation of Plug-in Components**
  - SUB-TRX-PSU5N – Sub-rack for the installation of active plug-in components. See page 60.
  - SUB-HPOI – Sub-rack for the installation of plug-in components that do not require power nor management to function. See page 61.
- **Rack Cooling**

  Forced-air Cooling Unit – TFAN-19-1U-4F-28V. See page 62.

JMA cabinets for indoor and outdoor installation of the master unit are also available.

This document contains JMA Wireless proprietary and/or confidential information.

3.1 - Signal Source Interfaces

3.1.1 - TCPRIPOI

CPRI Point of Interface

The CPRI Point of Interface (TCPRIPOI) is the direct interface between the JMA XRAN System and the JMA DAS (Distributed Antenna System).

The TCPRIPOI includes two boards:

- A digital board, which converts the digital baseband signals from the XRAN server into radio frequency (RF) signals.
- An RF board, which distributes RF signals from the digital board to the DAS Platform components.

- **Front Panel Description**

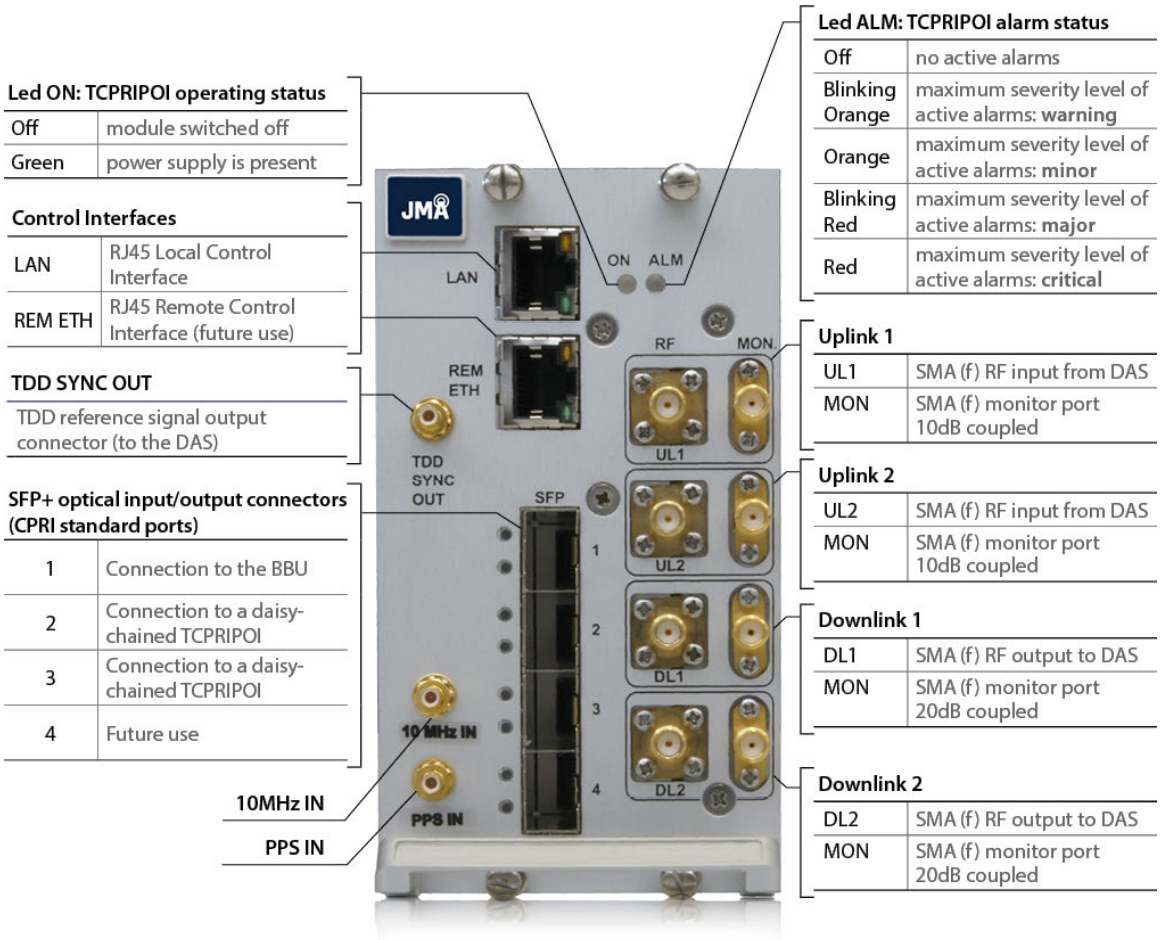

- **Procedures**

"Installing Master Unit DAS Components inside the Rack Cabinet" on page 67
"Installing Master Unit Plug-in Modules Inside Sub-racks" on page 70
"Connecting RF Cables" on page 73
"Connecting the TCPRIPOI Module to the XRAN Server" on page 86

This document contains JMA Wireless proprietary and/or confidential information.

3.1.2 - TDTPOI

DAS Tray Point of Interface

- **TDTPOI for FDD Applications**
  Front Panel Description

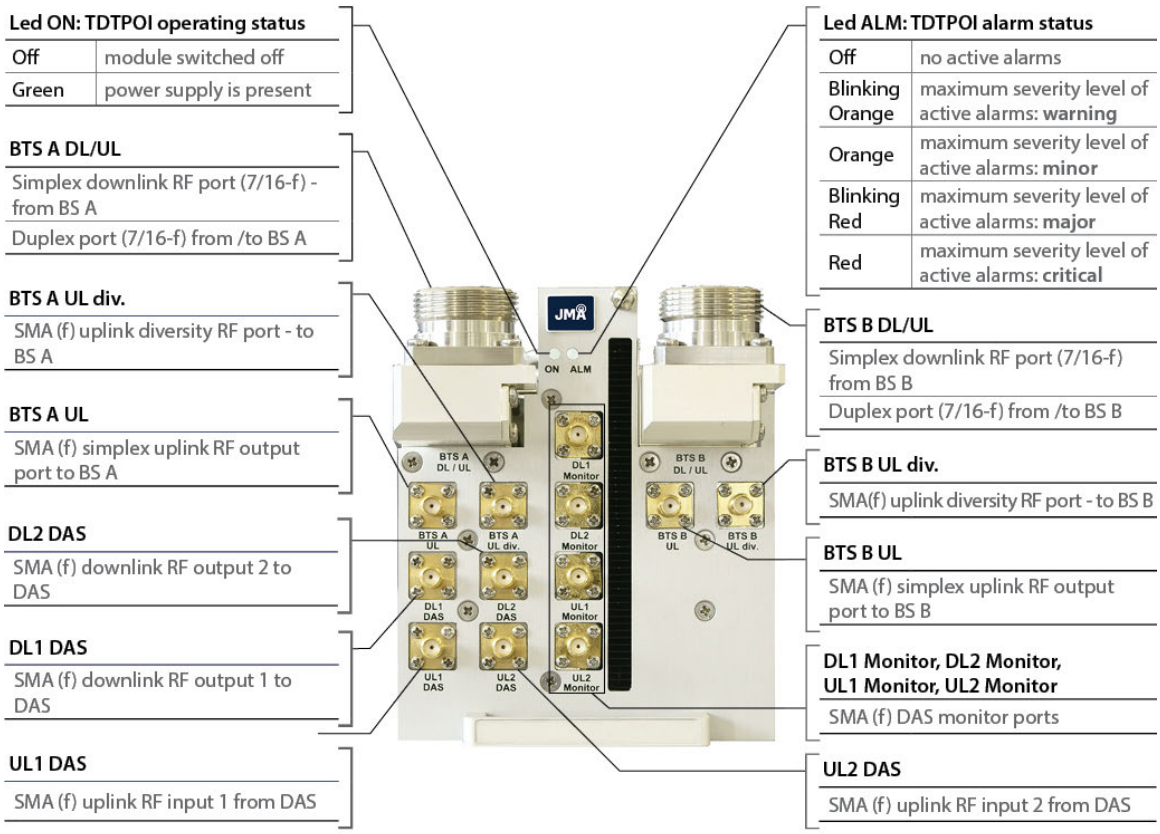

This document contains JMA Wireless proprietary and/or confidential information.

Block Diagram

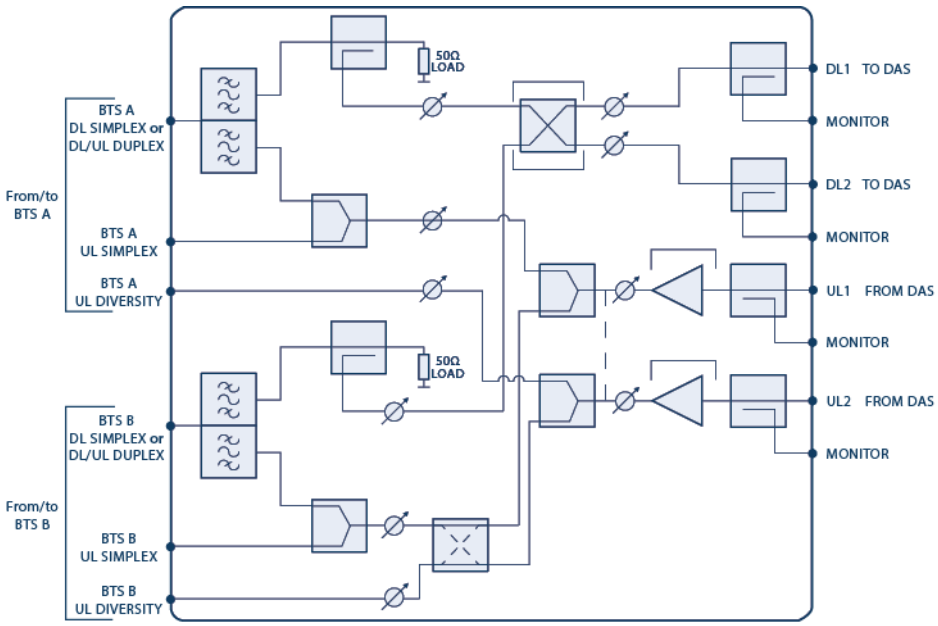

TDTPOI for TDD Applications: TDTPOI-25-D and TDTPOI-25-D-LL Additional Ports Description

The following figure describes the additional ports on the DAS Trays for LTE-TDD technology that pick up the TDD reference signals from the BS (Base Station):

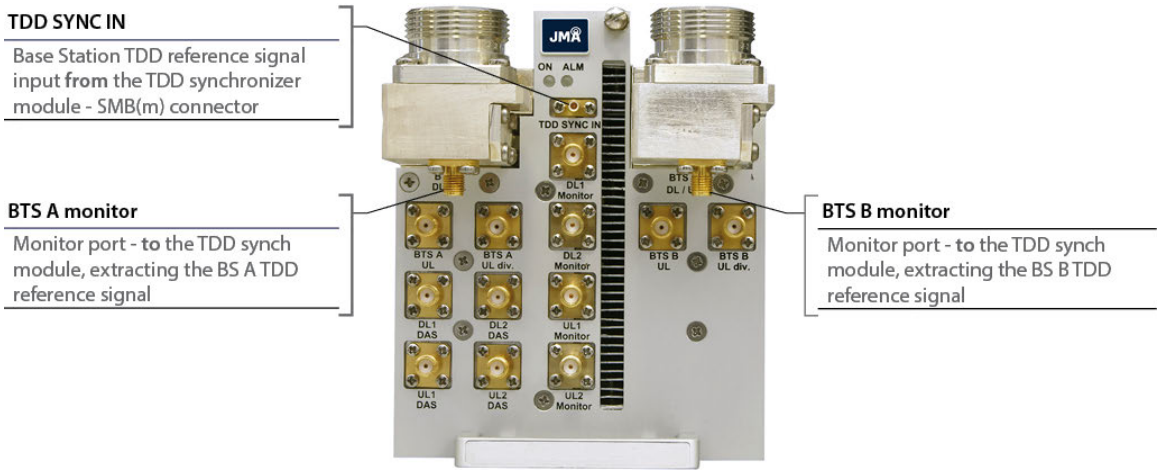

This document contains JMA Wireless proprietary and/or confidential information.

TDTPOI-35*x*-D and TDTPOI-35*x*-D-LL Front Panel Description

The TDTPOI-35*x*-D and TDTPOI-35*x*-D-LL modules provide the RF interface towards mid-band MIMO base stations.

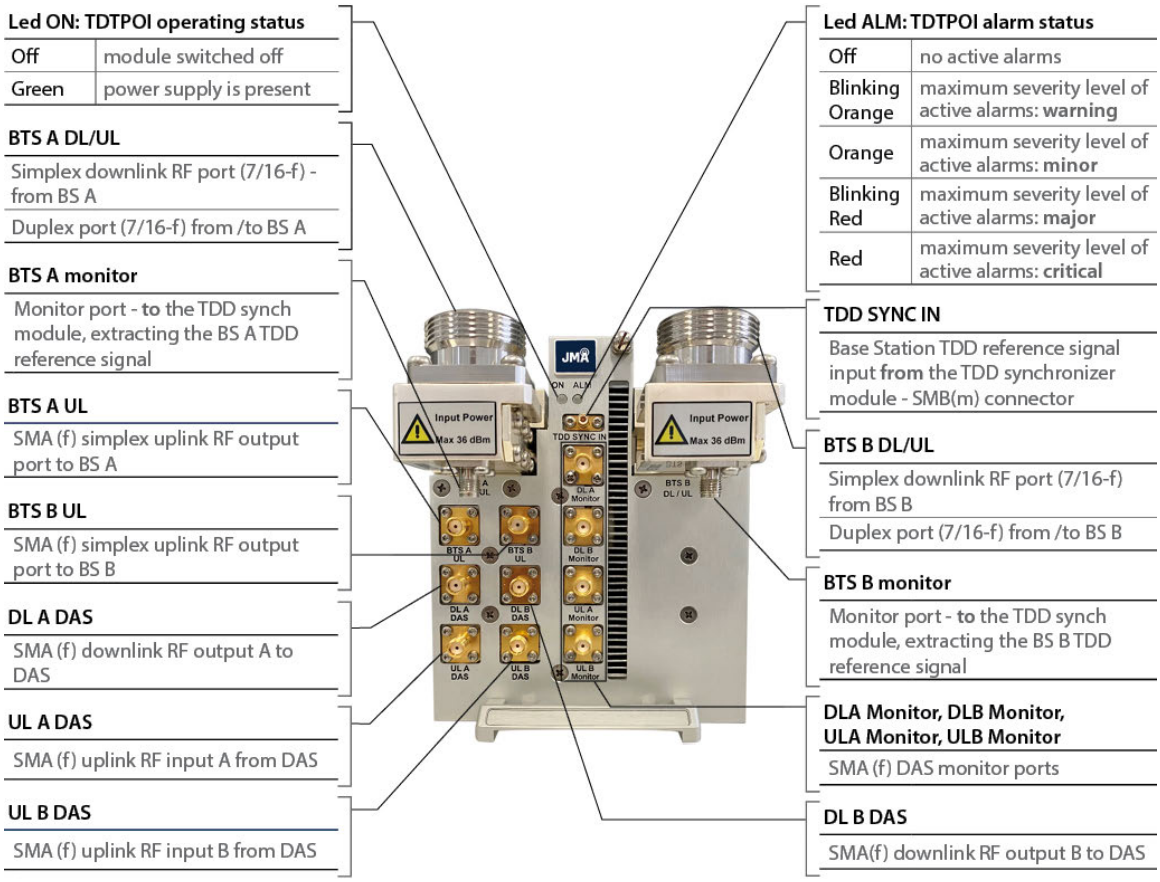

Procedures

"Installing Master Unit Plug-in Modules Inside Sub-racks" on page 70

"Connecting RF Cables" on page 73

This document contains JMA Wireless proprietary and/or confidential information.

3.1.3 - TAPOI

Active Point of Interface

The JMA active Point of Interface is a flexible, band-specific, and service provider-specific RF interface that accepts either a simplex or a duplex feed.

- **Front Panel Description**

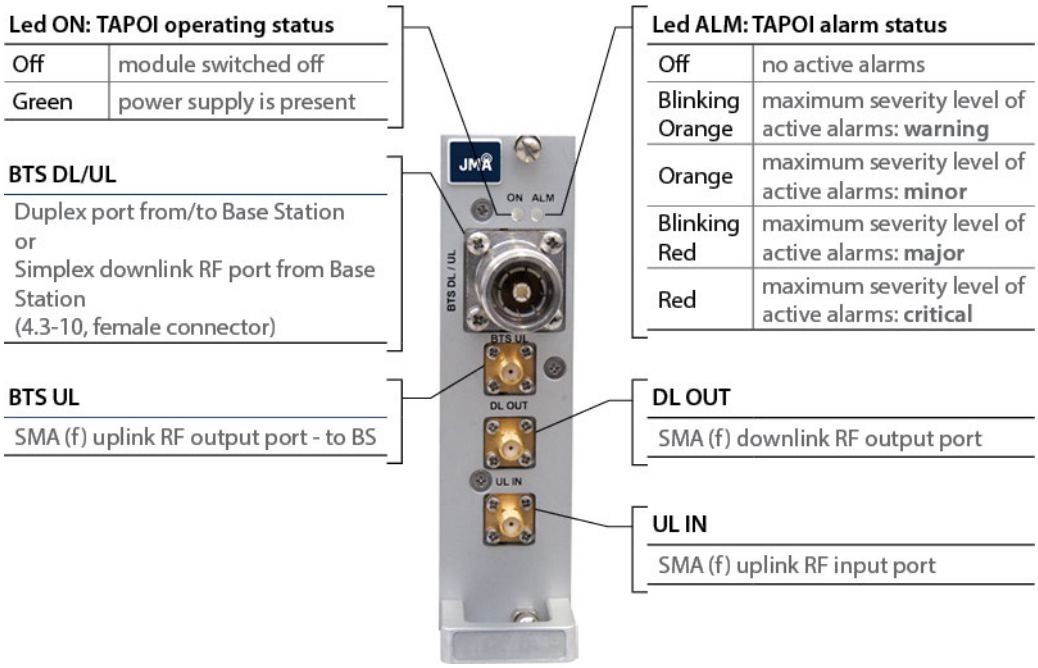

- **Block diagram**

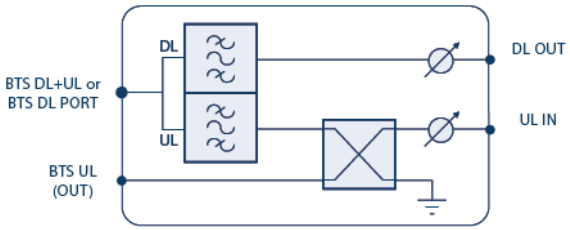

- **Procedures**

"Installing Master Unit Plug-in Modules Inside Sub-racks" on page 70

"Connecting RF Cables" on page 73

This document contains JMA Wireless proprietary and/or confidential information.

3.1.4 - TLPPOI

Active Low-power Point of Interface with Additional Gain Stage

JMA low-power Point of Interface modules (TLPPOI) are flexible, low-power RF interfaces used in optical DAS to interface one simplex, MIMO 2x2 low-power Base Station.

- **Front Panel Description**

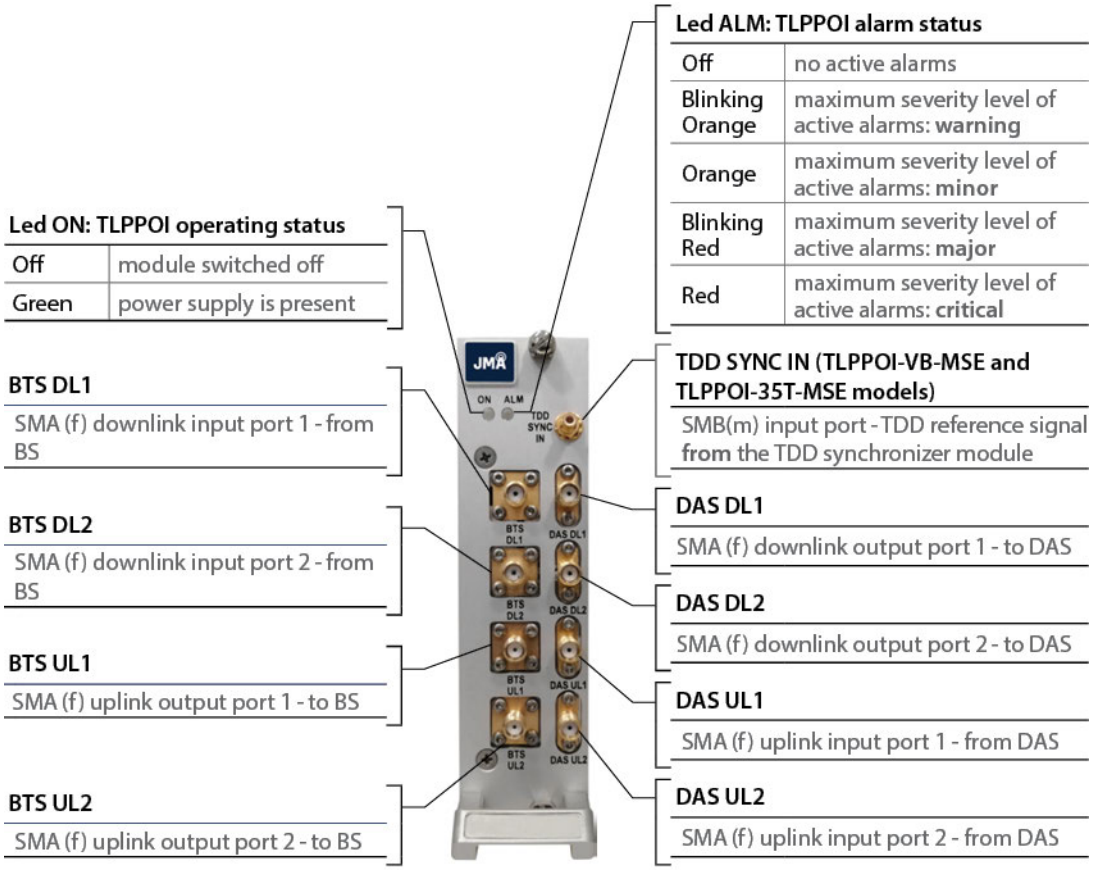

- **Procedures**

"Installing Master Unit Plug-in Modules Inside Sub-racks" on page 70

"Connecting RF Cables" on page 73

This document contains JMA Wireless proprietary and/or confidential information.

3.1.5 - TDPX

MIMO Passive Duplexer

JMA MIMO passive duplexers are single-band/single-operator RF interfaces between a duplex, MIMO 2x2, low-power Base Station and Point Of Interface modules with simplex inputs.

- **Front Panel Description**

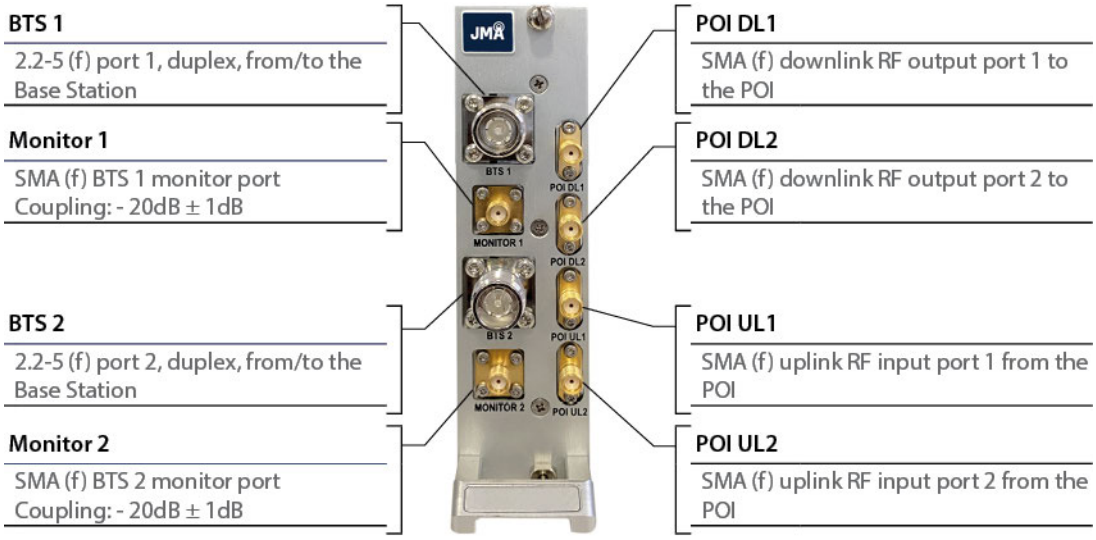

- **Procedures**

"Installing Master Unit Plug-in Modules Inside Sub-racks" on page 70

"Connecting RF Cables" on page 73

This document contains JMA Wireless proprietary and/or confidential information.

3.1.6 - TDFE

Donor Front End

The Digital Donor Front End (TDFE) is the off-air JMA RF interface towards a Donor Antenna. No physical connections are required between the TDFE and the cellular network: the Donor Antenna provides the connection to a Base Station over an air link.

- **Front Panel Description**

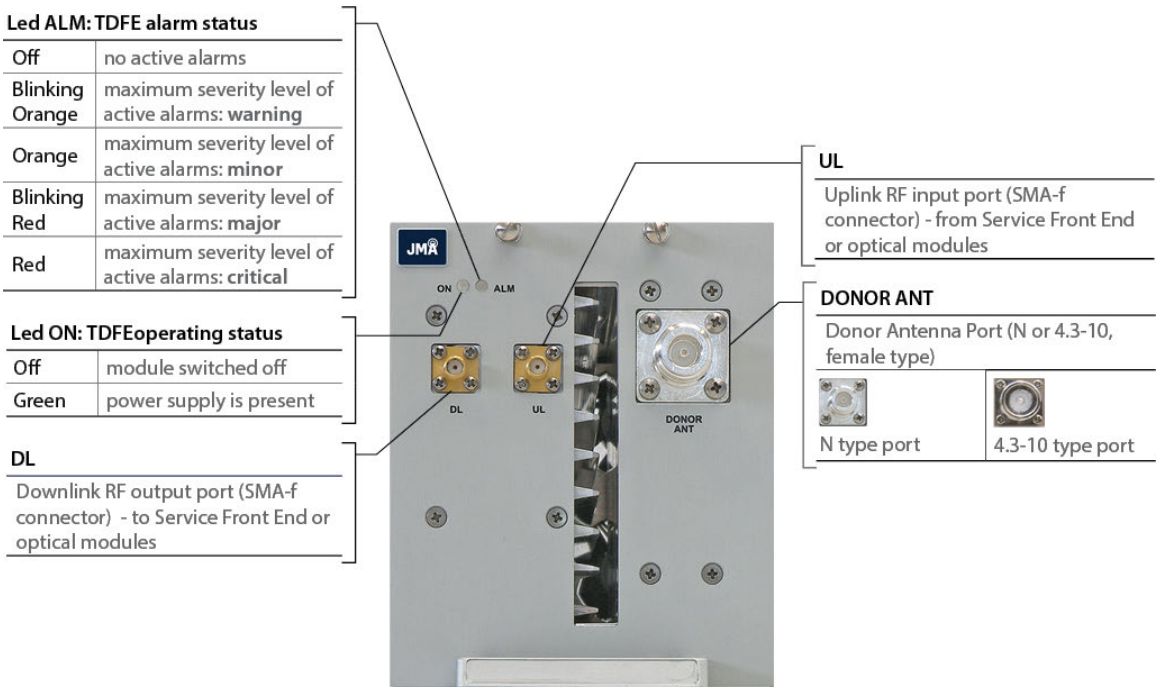

- **Block Diagram**

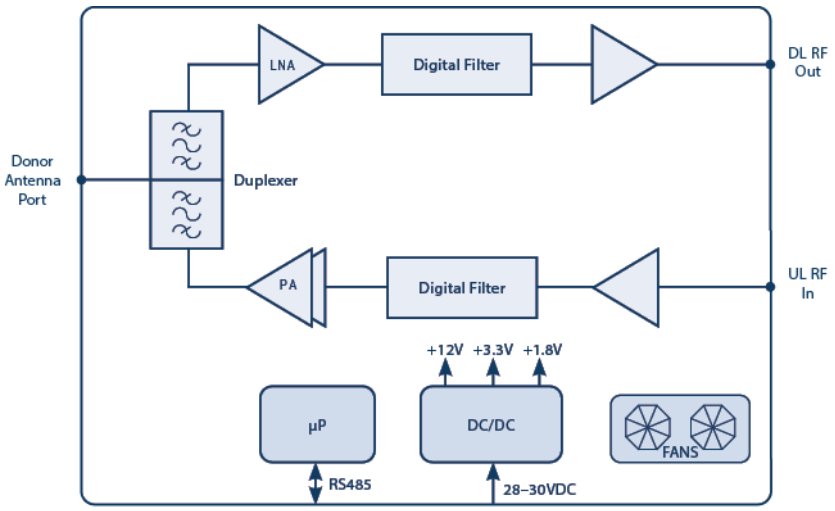

Each TDFE module hosts the duplexer, to be connected to the Donor Antenna to separate/combine downlink and uplink paths. In downlink the signal from the Donor Antenna is preamplified by a Low Noise Amplifier and converted into an IF signal by a down converter. The selection of the band of frequencies or channels to be extended is handled by a digital filter.

The digital filter can manage one variable band or two variable sub-bands (standard version). A full-feature version is available to manage up to nine variable sub-bands.

This document contains JMA Wireless proprietary and/or confidential information.

An up converter converts the IF signal into the RF output signal.

In uplink, the signal from the Service Front End or from the optical DAS is converted into an IF signal by a down converter, filtered and re-converted into an RF signal, amplified by a power amplifier and re-transmitted to the signal source.

- **Procedures**

  "Installing Master Unit Plug-in Modules Inside Sub-racks" on page 70

  "Connecting RF Cables" on page 73

  "Replacing Faulty Components" on page 102

  Note: Full-feature TDFE modules (TDFE-EGSM-F) must be installed in deep active sub-racks. See page 61.

This document contains JMA Wireless proprietary and/or confidential information.

3.2 - Capacity management

The JMA DAS Platform components for capacity management, TCM3-4 and TWS4, provide complete flexibility, enabling the JMA DAS architecture to be designed for reutilization of sectors across the campus or metro areas and support a reduction in head-end eNodeB equipment by up to 25%. As an example, sector remapping can be cycled to balance weekend demands from business week demands.

Transitions are streamlined because these configurations are facilitated via the DAS supervision module web interface, minimizing manual intervention and facility visits to enable reuse of capacity.

3.2.1 - TCM3-4 Capacity Manager Matrix (3x4)

The following figure describes the ports and LEDs on the TCM3-4:

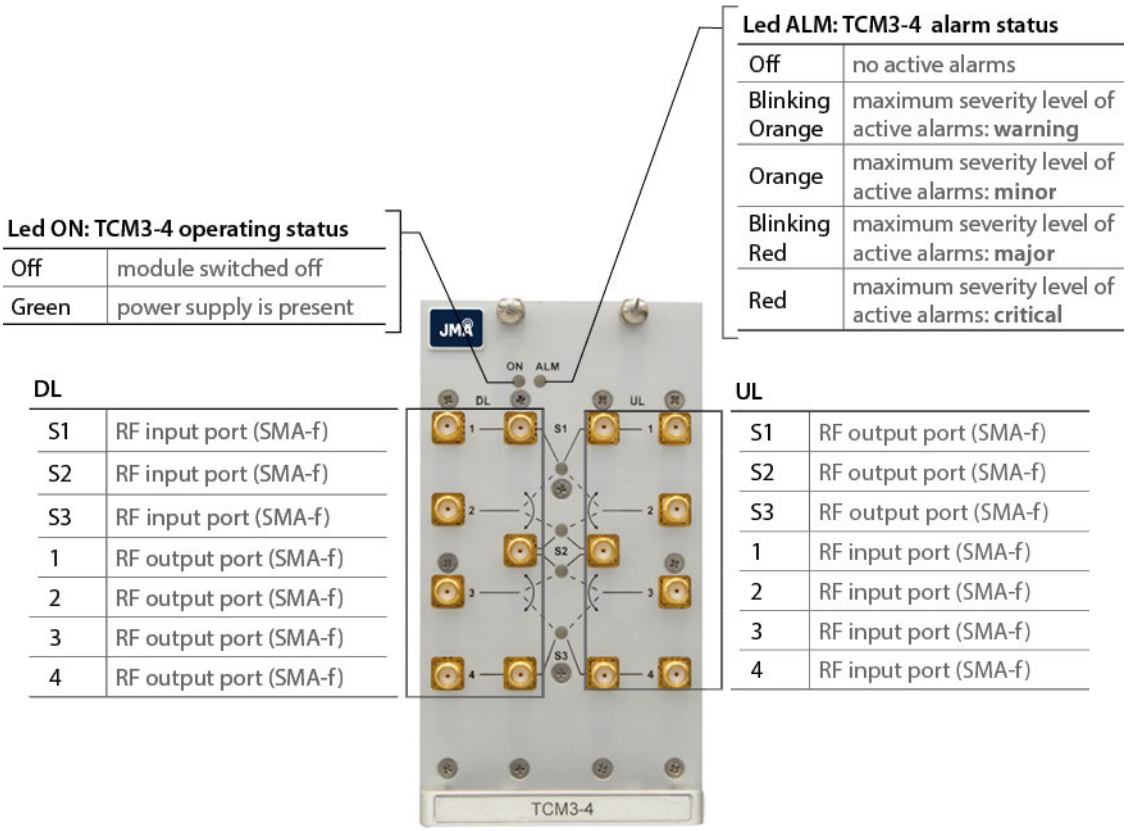

This document contains JMA Wireless proprietary and/or confidential information.

3.2.2 - TSW4 Configurable RF Switch

The following figure describes the ports and LEDs on the TSW4:

Led ALM: TSW4 alarm status

Off	no active alarms
Blinking Orange	maximum severity level of active alarms: **warning**
Orange	maximum severity level of active alarms: **minor**
Blinking Red	maximum severity level of active alarms: **major**
Red	maximum severity level of active alarms: **critical**

Led ON: TSW4 operating status

Off	module switched off
Green	power supply is present

DL

1	RF output/input port (SMA-f)
2	RF output/input port (SMA-f)
DL C	RF input/output port (SMA-f)
3	RF output/input port (SMA-f)
4	RF output/input port (SMA-f)

UL

1	RF input/output port (SMA-f)
2	RF input/output port (SMA-f)
UL C	RF output/input port (SMA-f)
3	RF input/output port (SMA-f)
4	RF input/output port (SMA-f)

- **Procedures**

  "Installing Master Unit Plug-in Modules Inside Sub-racks" on page 70

  "Connecting RF Cables" on page 73.

3.3 - RF Distribution, Filtering, and Time Synchronization

3.3.1 - Splitter/Combiner

JMA two-way and four-way splitter/combiner modules can be used to manage either up to four Point of Interface (or TDFE) modules, operating in the same band, or up to four optical modules.

JMA Splitter/Combiner modules can be deployed in TDD systems.

Four-way Combiner/Splitter (TSC4W-U and TSC4W-X) Input/Output Ports

- TSC4W managing up to four POIs or TDFEs operating in the same band

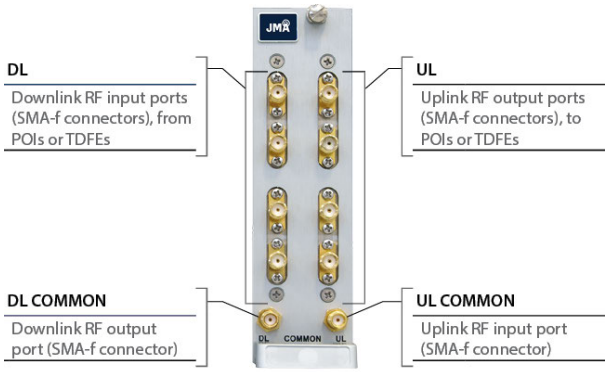

- TSC4W managing up to four optical modules

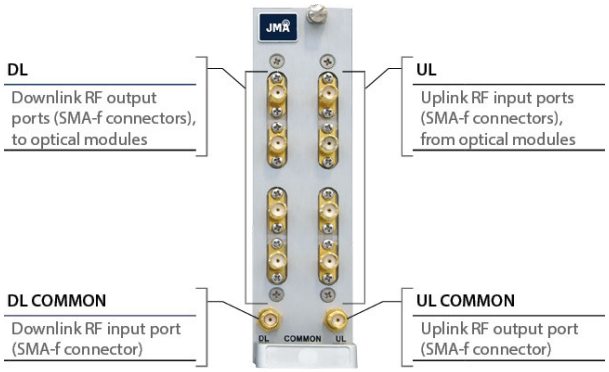

Two-way Combiner/Splitter (TSC2W-U and TSC2W-X) Input/Output Ports

- TSC2W managing up to two POIs or TDFEs operating in the same band

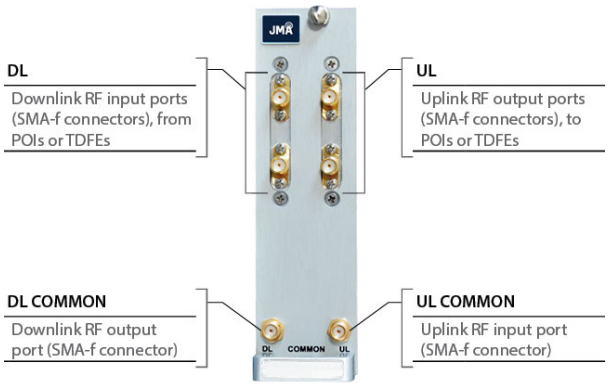

- TSC2W managing up to two optical modules

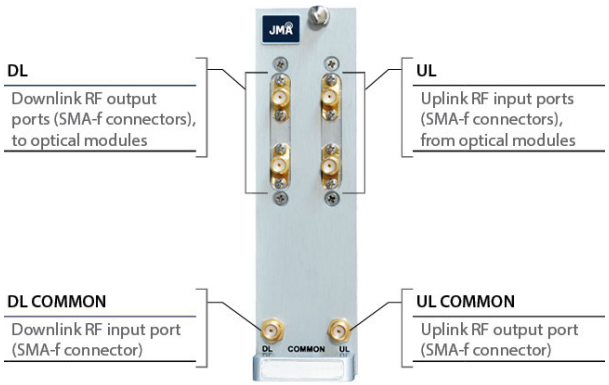

This document contains JMA Wireless proprietary and/or confidential information.

3.3.2 - Multiplexers

JMA multiplexers are used to distribute signals in multi-band configurations.

3.3.2.1 - Diplexers

TDIP-LO/HI2325-D-R

The TDIP-LO/HI2325-D-R is the two-port to one-port multiplexer that combines low-band and high-band downlink signals in JMA nine-band on a single layer solution, which serves two co-located remote units (main and add-on).

- **Input/Output Ports**

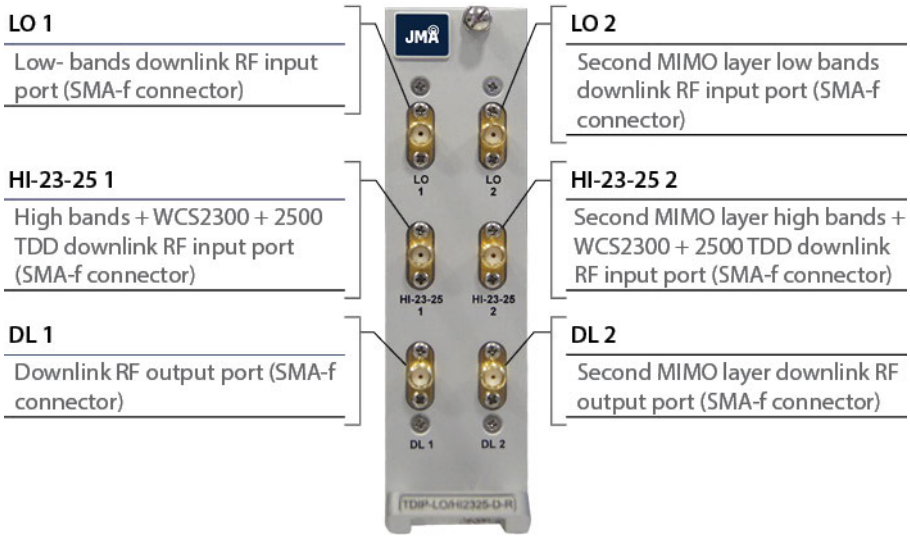

This document contains JMA Wireless proprietary and/or confidential information.

TDIP-LOHI/2325-D-R and TDIP-LOHI23/25-D-R

The TDIP-LOHI/2325-D-R and TDIP-LOHI23/25-D-R are the two-port to one-port multiplexers that combine downlink signals, serving two co-located remote units (main and add-on).

- **TDIP-LOHI/2325-D-R Input/Output Ports**

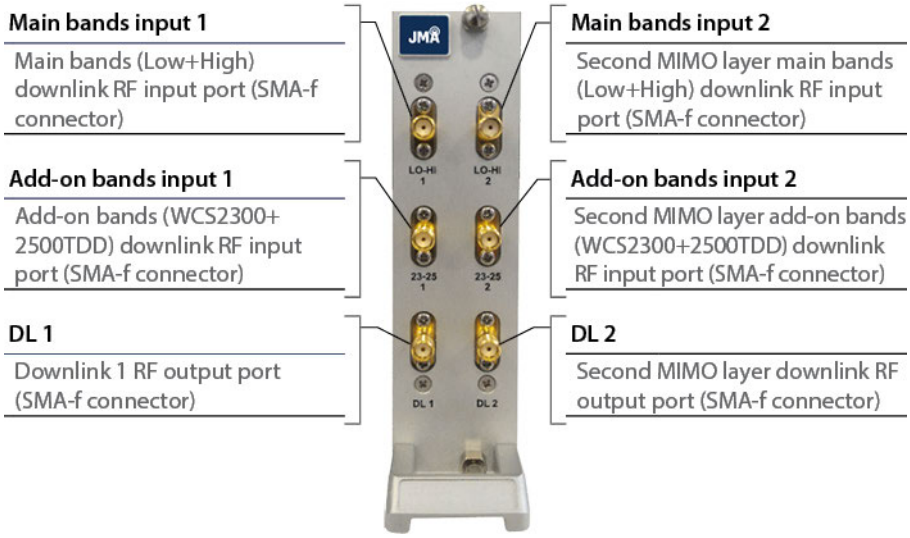

- **TDIP-LOHI23/25-D-R Input/Output Ports**

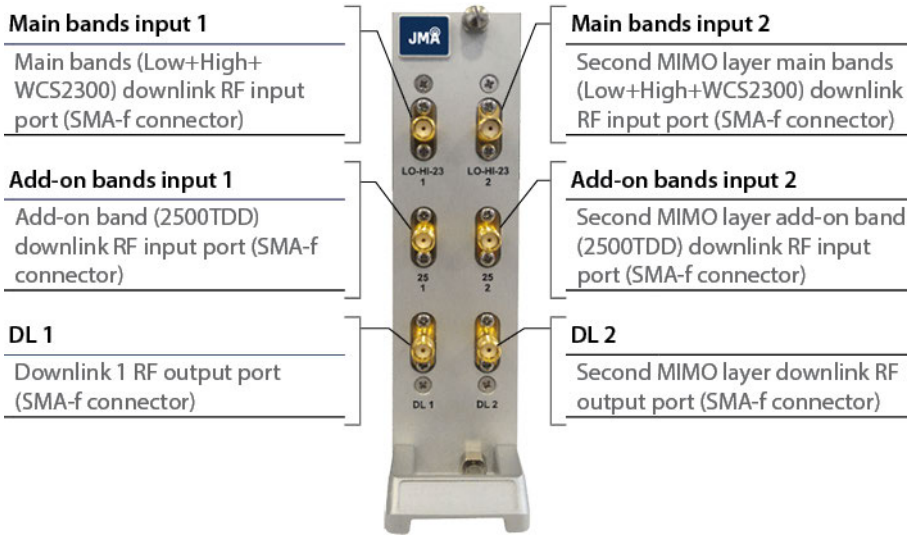

This document contains JMA Wireless proprietary and/or confidential information.

3.3.2.2 - Triplexers

Different models of triplexers are available. Triplexers with the built-in 1:4 splitter/combiner allow the distribution of RF signals to four optical modules.

- **Triplexers (FDD) without Built-in 1:4 Splitter/Combiner TRI-x and TMBC-67E8AE - Input/Output Ports**

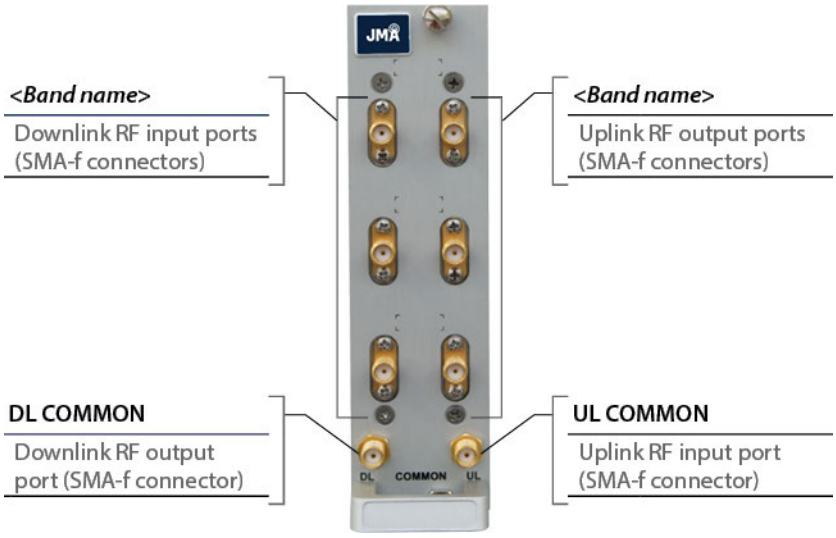

- **Triplexers (FDD) with Built-in 1:4 Splitter/Combiner TRI-SC4W-x - Input/Output Ports**

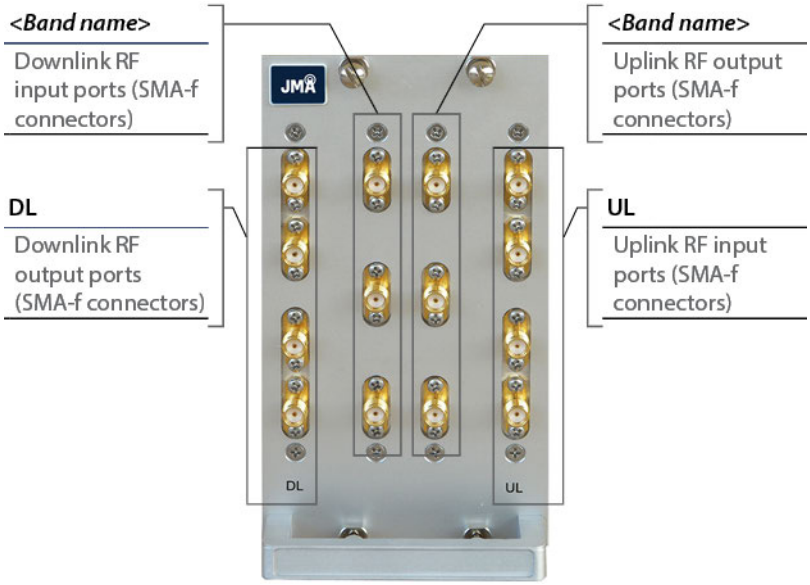

This document contains JMA Wireless proprietary and/or confidential information.

- **Triplexers (FDD/TDD)**

  FDD/TDD triplexers for LTE-TDD applications combine the FDD/TDD bands and synchronize the downstream DAS components.

TRI-2325TR and TRI-23T26TR - Input/Output Ports

- TRI-2325TR

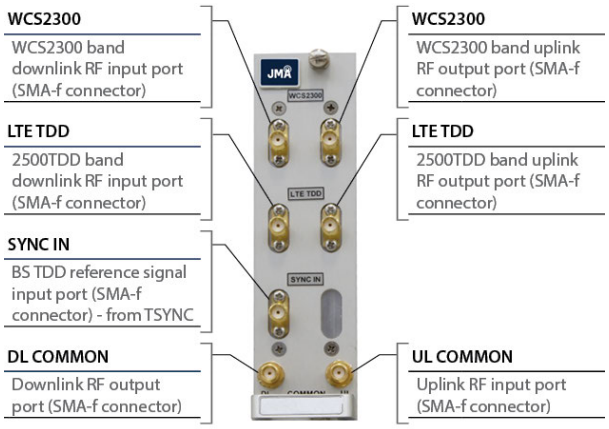

- TRI-23T26TR

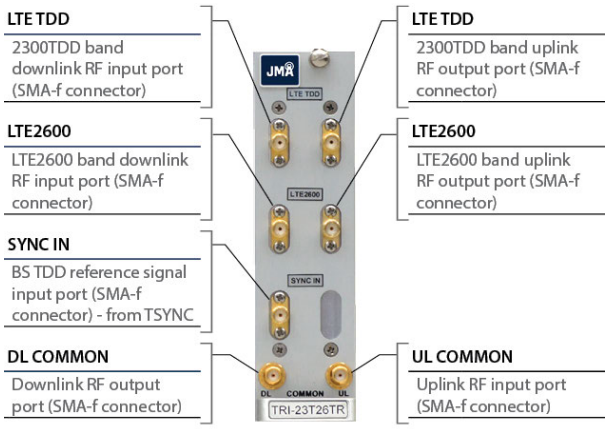

This document contains JMA Wireless proprietary and/or confidential information.

3.3.2.3 - Pentaplexers and Esaplexers

Input/Output Ports

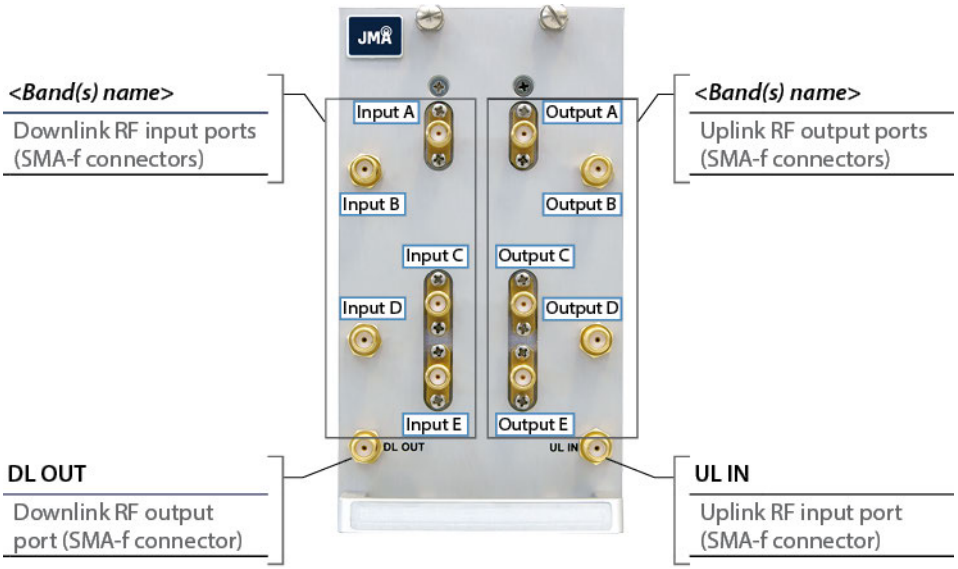

3.3.2.4 - Eptaplexers

Two different models of eptaplexers are available to support two different combinations of main and add-on remote units.

- **TEPTA-UW-LH23/25 - Input/Output Ports**

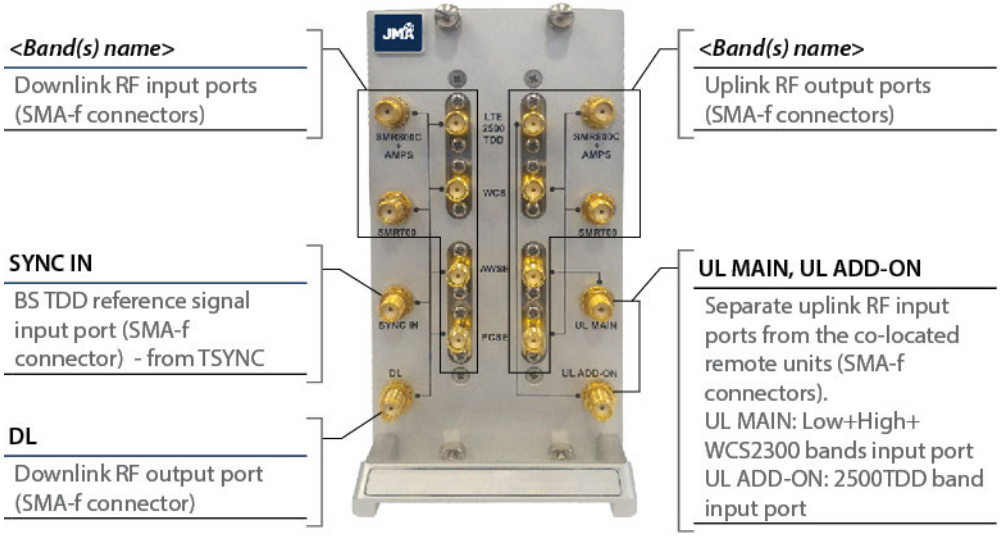

- **TEPTA-UW-LH/2325 - Input/Output Ports**

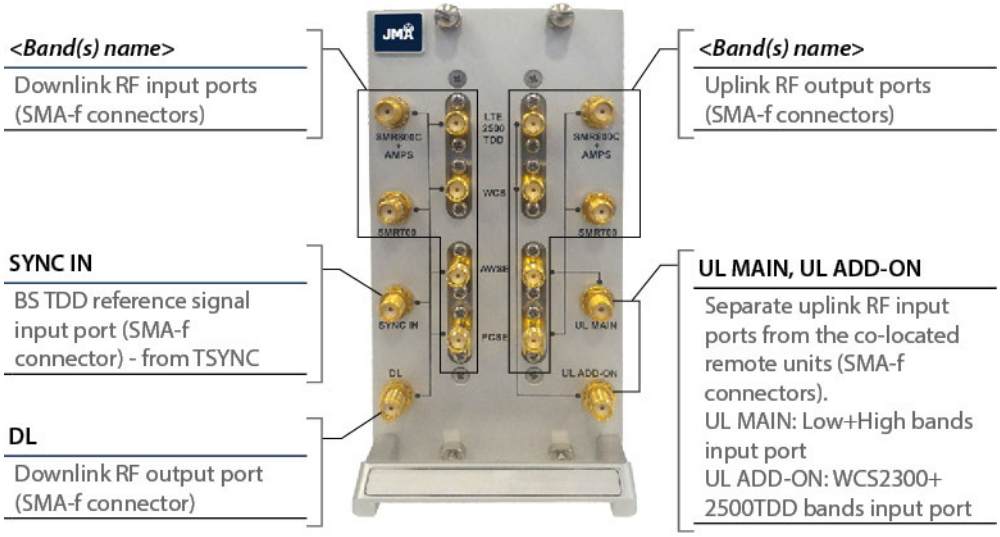

This document contains JMA Wireless proprietary and/or confidential information.

3.3.3 - Master Band Combiners

Master Band Combiners distribute the FDD/TDD bands and synchronize the downstream DAS components for Time-Division Long-Term Evolution (LTE-TDD) technology. Different models of Master Band Combiners are available.

- **TMBC-LO1925TR, TMBC-19HAWX2325TR, and TMBC-7E19HAWX25TR - Input/Output Ports**

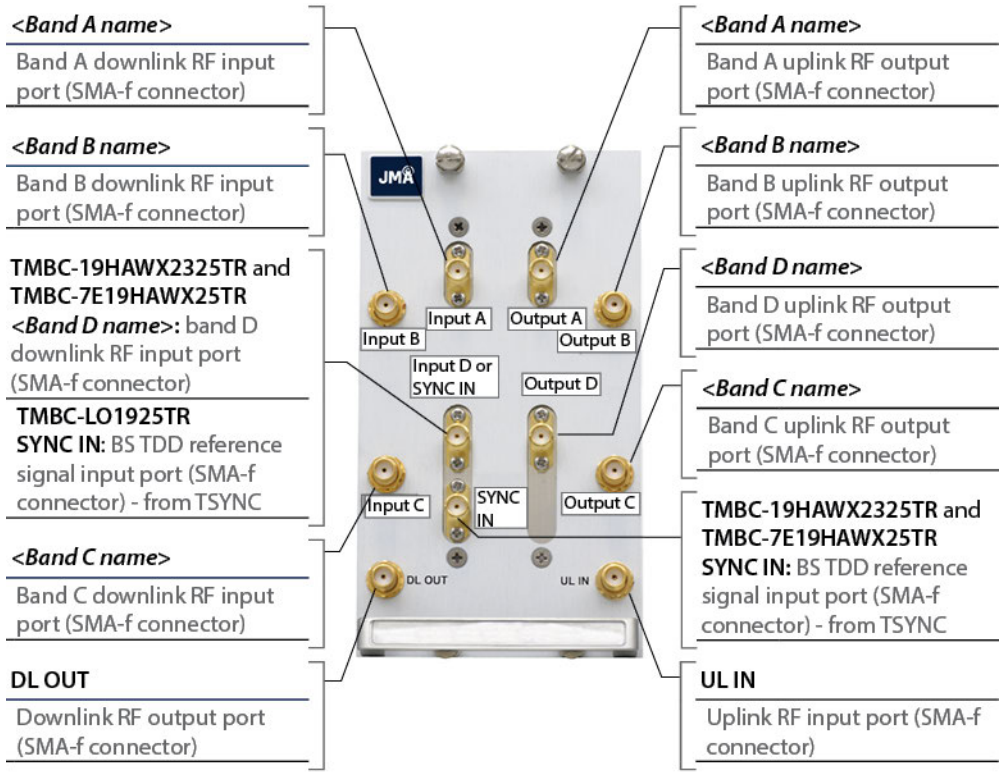

- **TMBC-35WTR - Input/Output Ports**

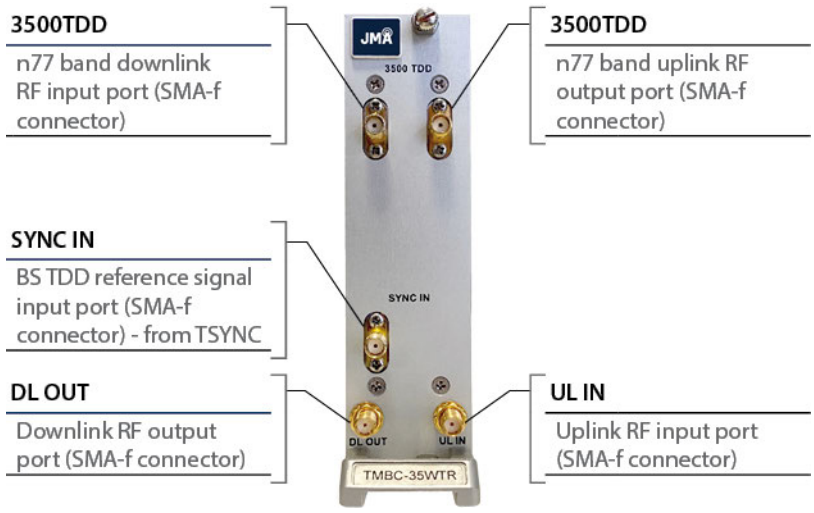

This document contains JMA Wireless proprietary and/or confidential information.

3.3.4 - TDD Synchronizer and Reference Module

The TDD synchronizer manages and distributes the TDD reference signal.

- **TSYNC, TSYNC-X, and TSYNC-N - Front Panel Description**

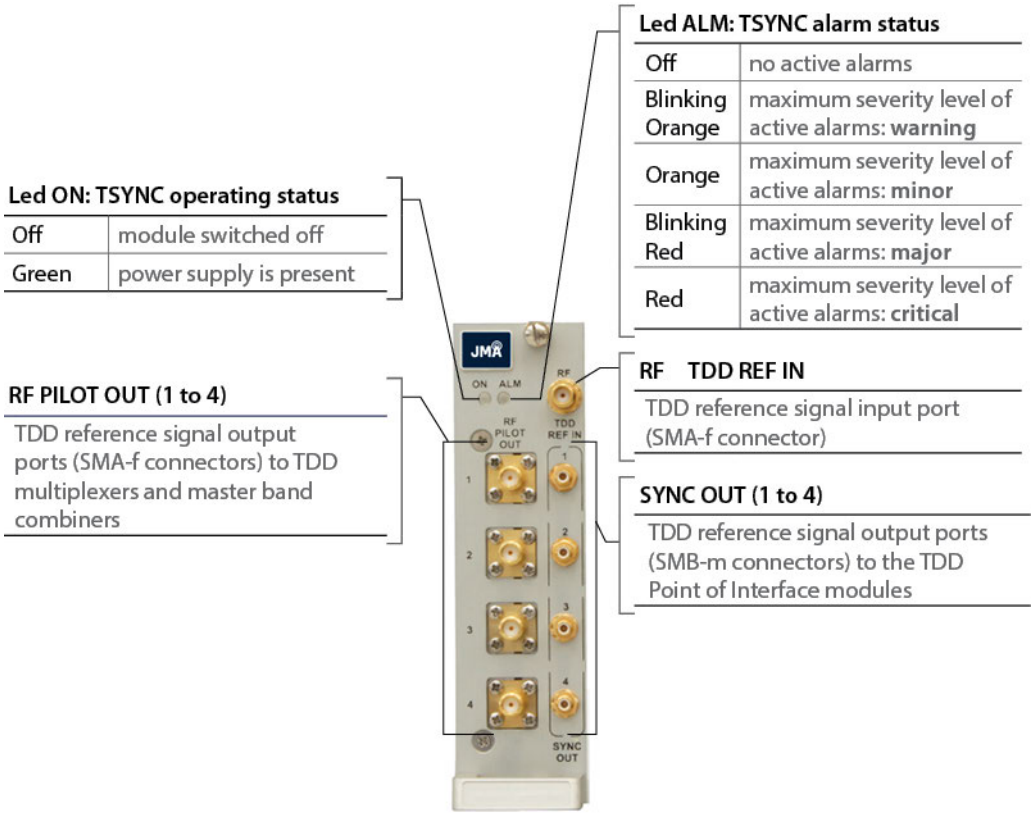

- **TSYNC-C - Front Panel Description**

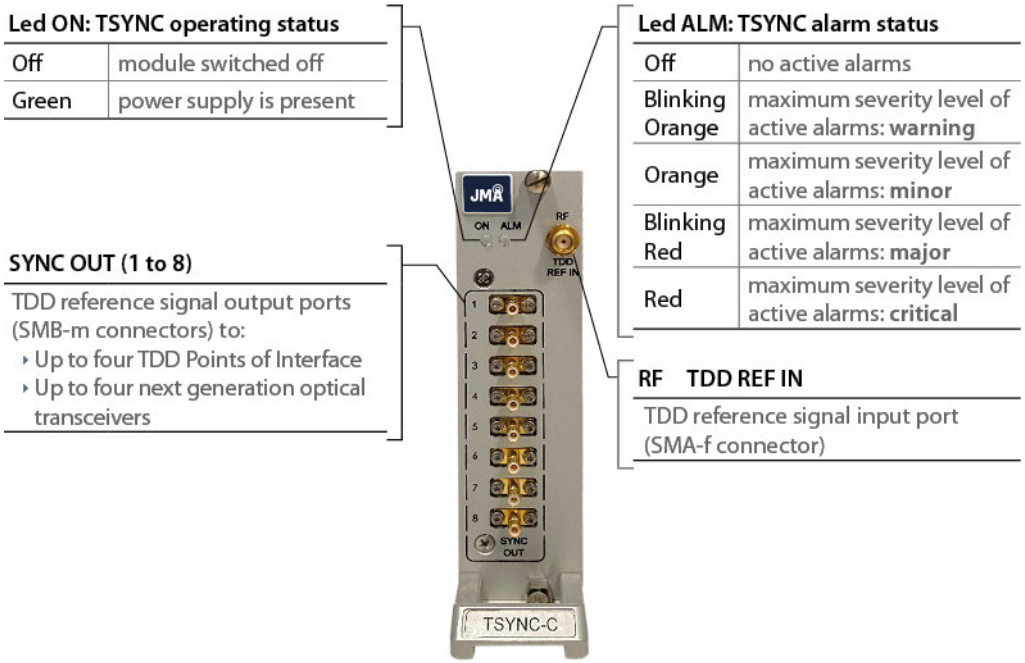

This document contains JMA Wireless proprietary and/or confidential information.

3.4 - Optical Interfaces

The following components provide the optical interface between master unit and remote units allowing the bidirectional transmission of signals over the connecting optical fiber.

3.4.1 - TTR Plug-in Optical Modules

Plug-in optical modules are connected to the remote units using single-mode SMR 9/125 optical fiber. An auto-levelling functionality (AGC) compensates up to 10dB optical link loss in order to guarantee constant gain over different optical budgets. This feature simplifies system installation, makes commissioning quick and easy and avoids field adjustments.

3.4.1.1 - TTRU1W-S-M, TTRU2W-S-M, TTRU4W-S-M

- **TTRU1W-S-M**, 1: 1 configuration: One optical transmitter and one optical receiver for the management of one remote unit (10dB optical link budget, up to 20km distance - 12.4 miles).
- **TTRU2W-S-M**, 1:2 configuration: One optical transmitter split by two and two combined optical receivers, for the management of up to two remote units (10dB optical link budget, up to 20km distance- 12.4 miles).
- **TTRU4W-S-M**, 1:4 configuration: One optical transmitter split by four and four combined optical receivers, for the management of up to four remote units (7dB optical link budget, up to 14km distance - 8.7 miles).

- **Example: TTRU4W-S-M Block Diagram**

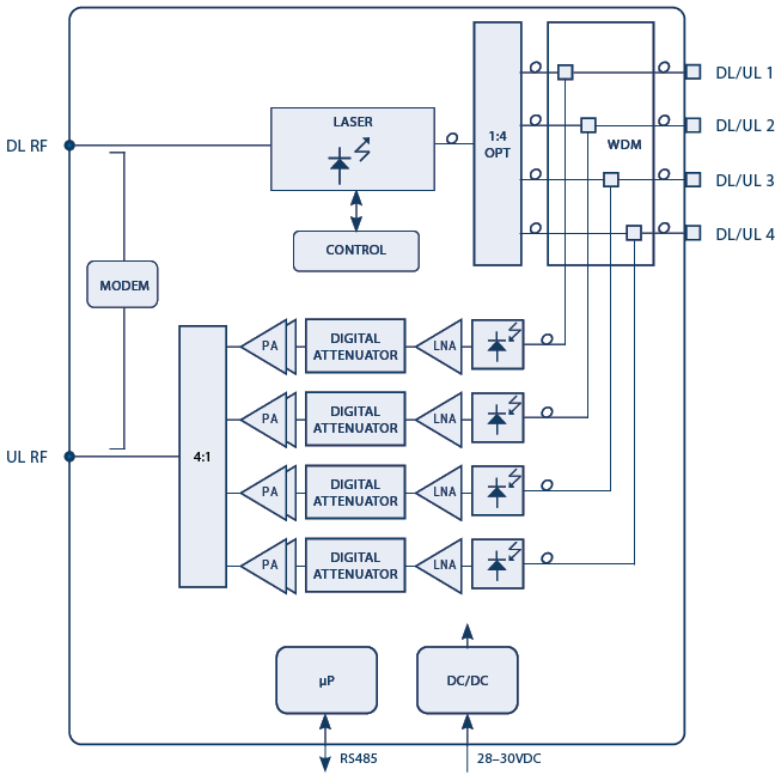

This document contains JMA Wireless proprietary and/or confidential information.

Example: TTRU4W-S-M Front Panel Description

The following figure describes the connectors and LEDs on the TTRU4W-S-M optical module (1:4 configuration - WDM):

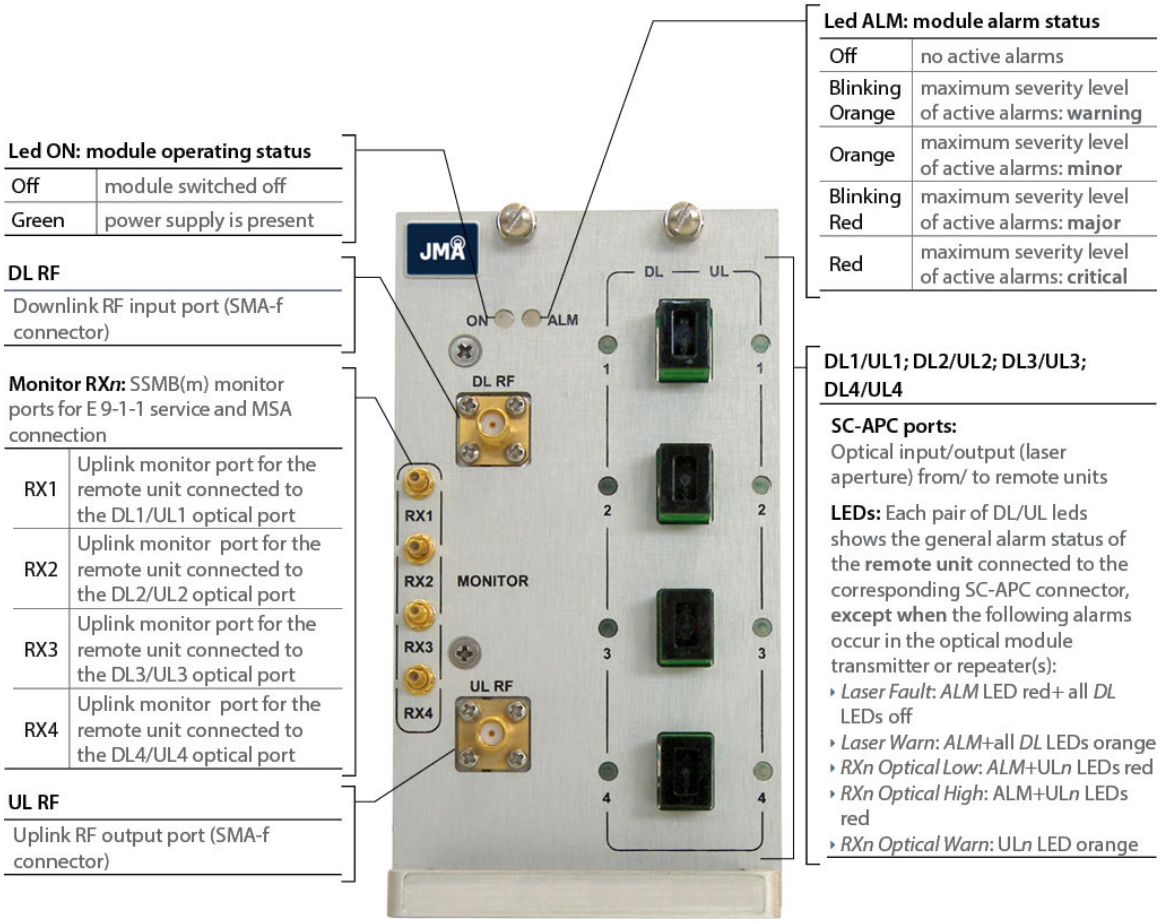

Procedures

"Installing Master Unit Plug-in Modules Inside Sub-racks" on page 70

"Connecting Optical Components" on page 76

This document contains JMA Wireless proprietary and/or confidential information.

3.4.1.2 - TTRU2W-S-M-C2

The TTRU2W-S-M-C2 supports two remote locations. In each remote location main and add-on remote units are connected to the same fiber using an optical splitter (TOPT-SC2).

- **Front Panel Description**

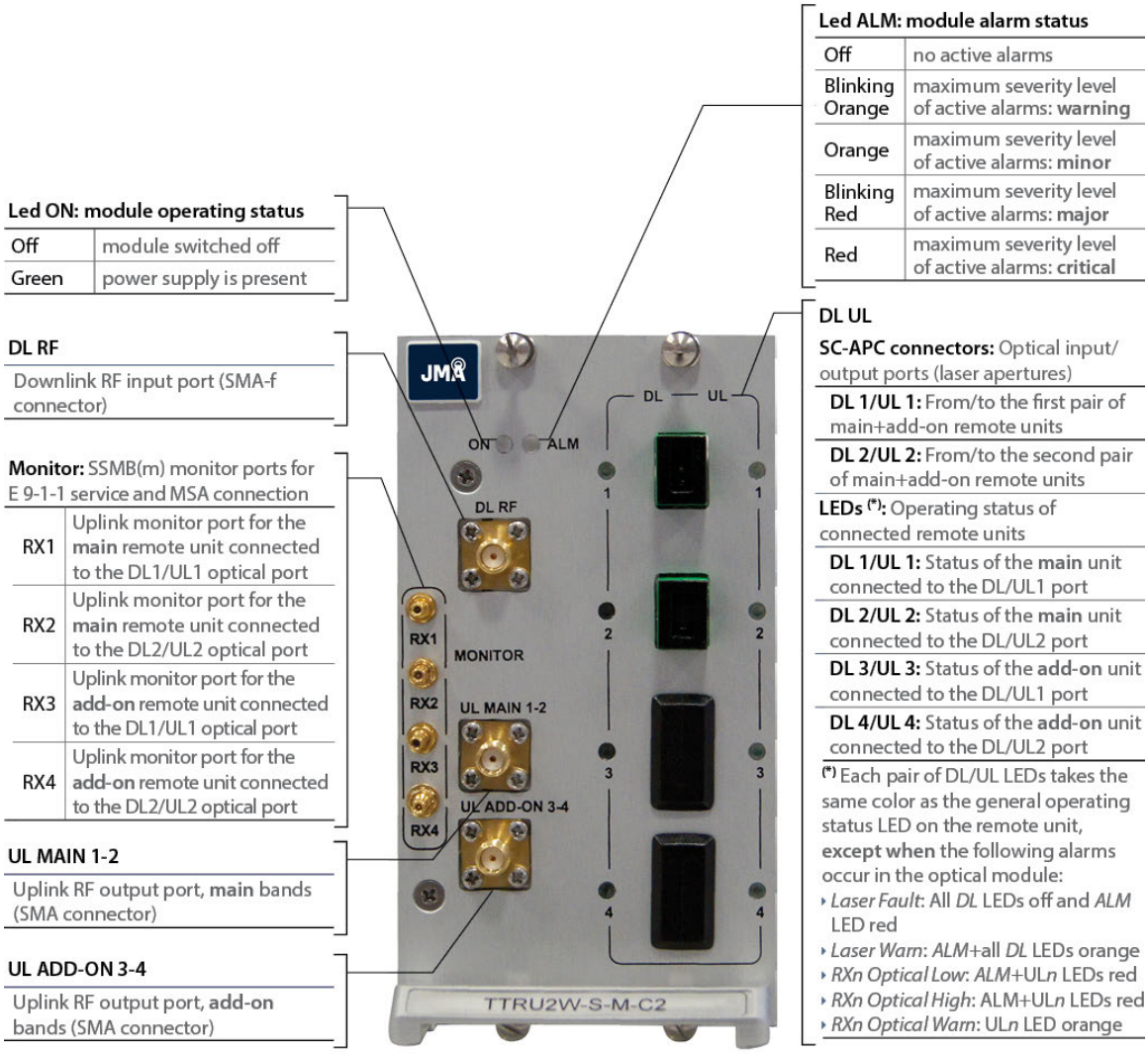

- **Procedures**

"Installing Master Unit Plug-in Modules Inside Sub-racks" on page 70

"Connecting Optical Components" on page 76

This document contains JMA Wireless proprietary and/or confidential information.

3.4.1.3 - TTRX24W-S-M

The TTRX24W-S-M is the plug-in, ultra-wide band, MIMO 2x2 optical transceiver, which provides the optical interface towards up to two MIMO remote units.

- **Block Diagram**

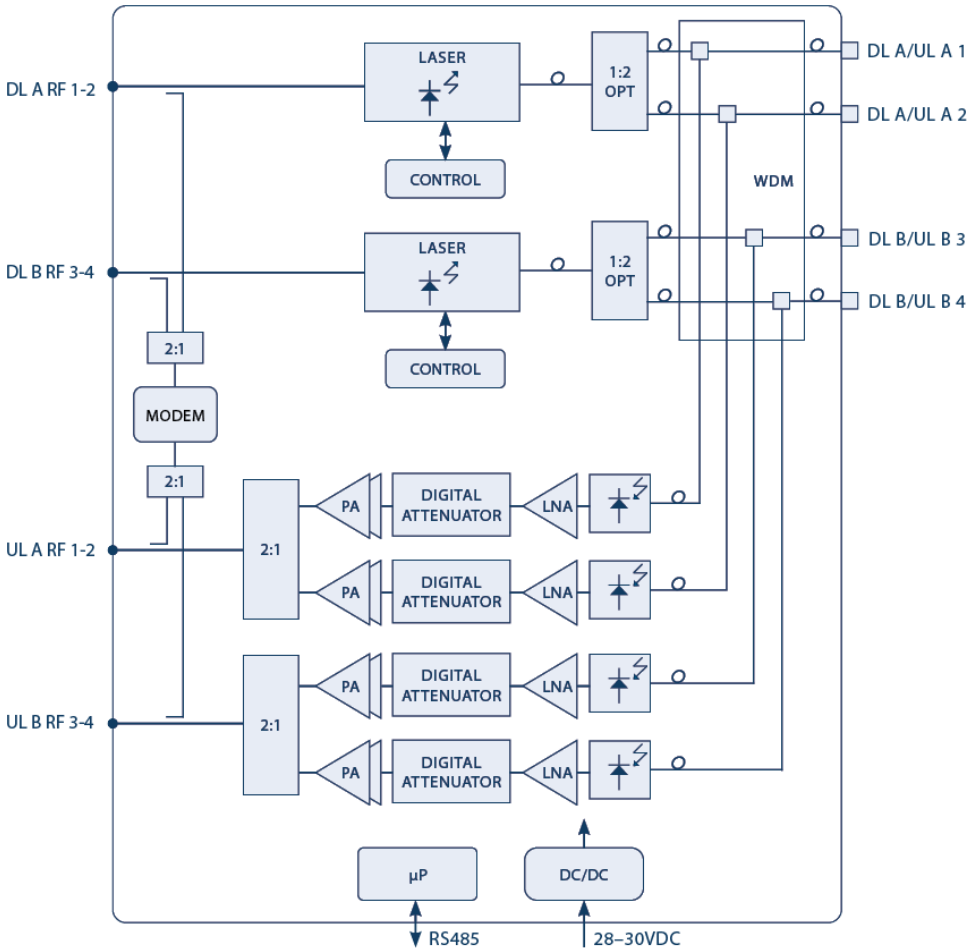

This document contains JMA Wireless proprietary and/or confidential information.

Front Panel Description

The following figure describes the ports and LEDs on the TTRX24W-S-M optical module:

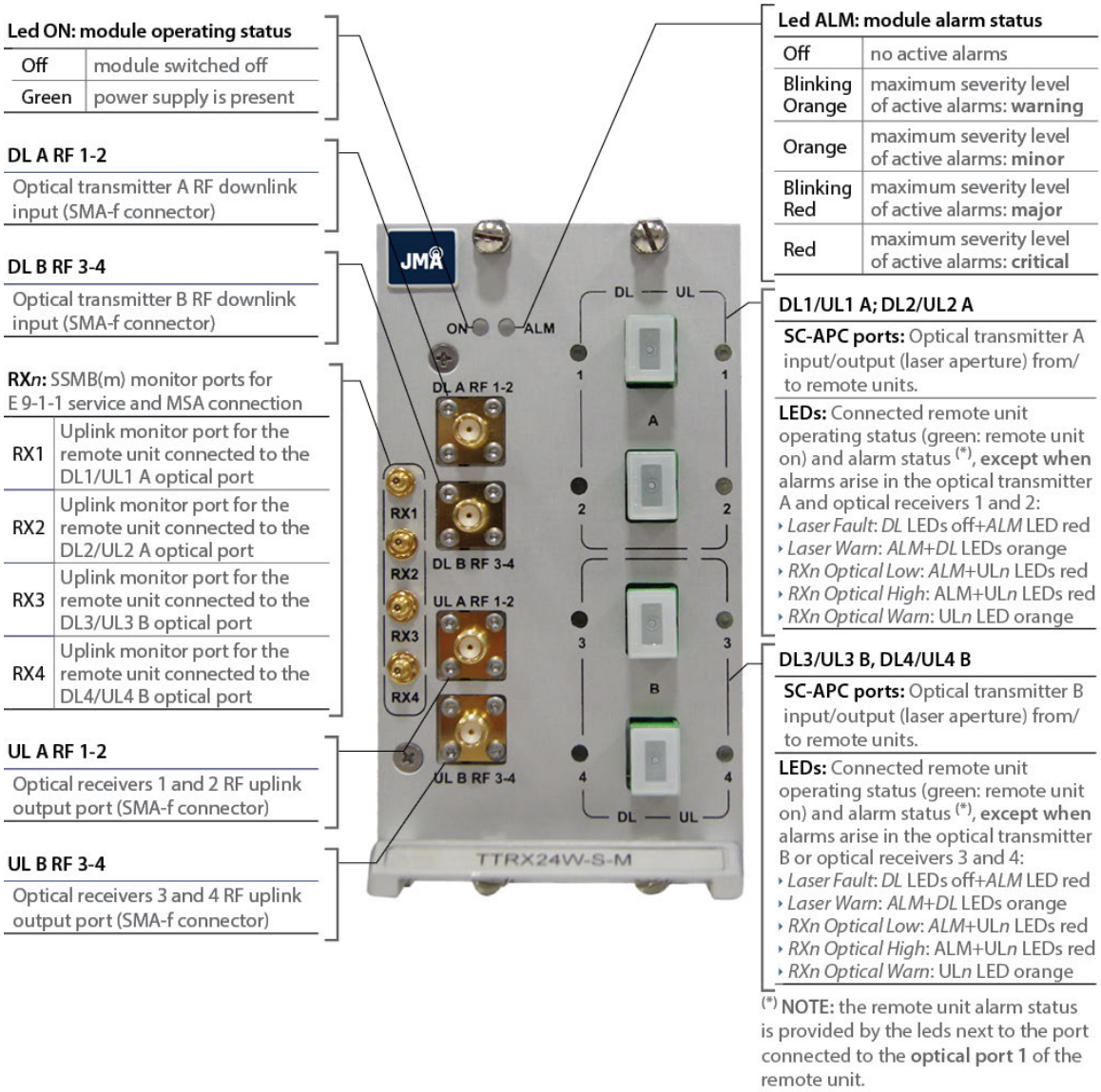

Procedures

"Installing Master Unit Plug-in Modules Inside Sub-racks" on page 70

"Connecting Optical Components" on page 76

This document contains JMA Wireless proprietary and/or confidential information.

3.4.2 - Next Generation Optical Transceivers

The next generation, ultra-wide band optical transceivers are the optical interface between the master unit and up to eight next generation MIMO 2x2 remote units.

The following table lists JMA next generation optical transceivers and provides electrical, environmental, and mechanical specifications:

Commercial Code	Operating Frequency Band	Power Supply	Weight	Dimensions (HxWxD) max volume	Operating Temperature Range	Non-condensing Relative Humidity
ED35BD	3450–3550MHz	28–50Vdc	5.2kg (11.5lb)	19" - 1U, depth 330mm (13in)	-5°C to +55°C (+23°F to +131°F)	5%-85% Short period limit (max 96 hours): 5%-93%
ED35TD	3700–3980MHz					
ED35ID	3400–3800MHz					

Warning:

The Next Generation Optical Transceivers contain a non-replaceable battery so observe the following precautions:

- During use, storage, or transportation of the equipment, do not subject the battery to extreme conditions, such as:
  - An extremely high temperature surrounding environment.
    Note: The allowable temperature range is -40 to +85°C.
  - An extremely low air pressure.

  Exposing the battery to extreme conditions can result in an explosion or the leakage of flammable liquid or gas.
- Disposal of the battery into fire or a hot oven, or mechanically crushing or cutting of the battery, can result in an explosion.

Next Generation Optical Transceivers Front Panel Description

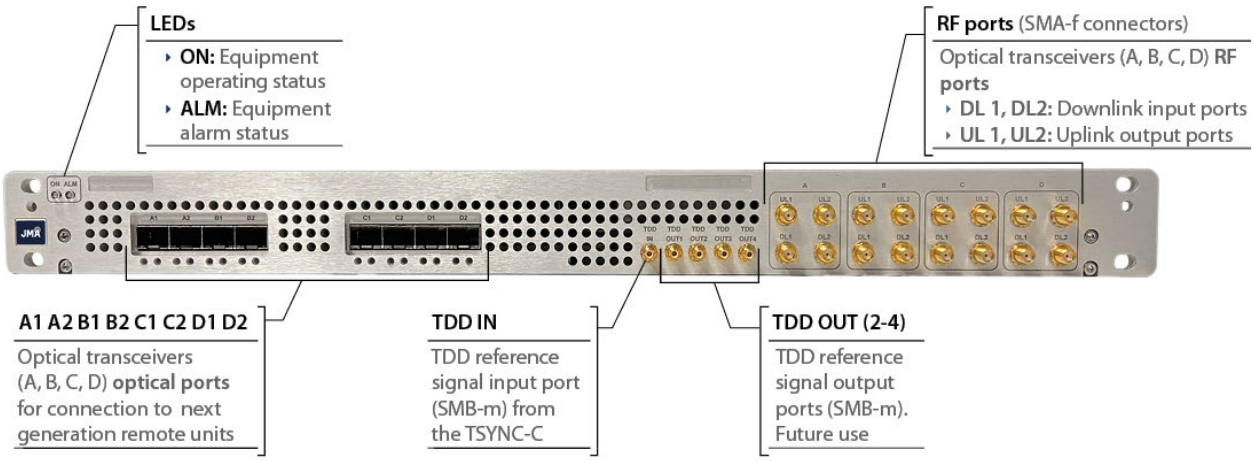

This document contains JMA Wireless proprietary and/or confidential information.

Next Generation Optical Transceivers Rear Panel Description

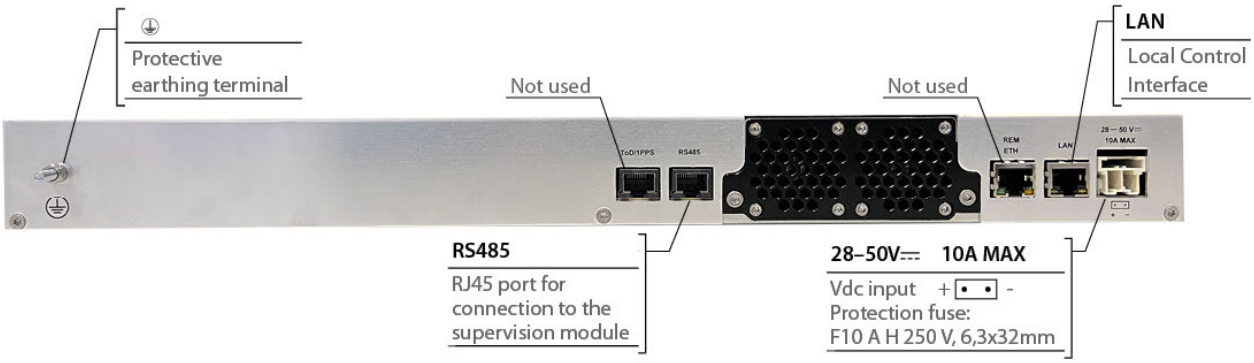

LEDs Description

ON and ALM LEDs

ON: Equipment operating status	
Off	Module switched off
Green	Power supply is present

ALM: Equipment alarm status	
Off	No active alarms
Blinking Orange	Maximum severity level of active alarms: warning
Orange	Maximum severity level of active alarms: minor
Blinking Red	Maximum severity level of active alarms: major
Red	Maximum severity level of active alarms: critical

LEDs Below each Optical Port

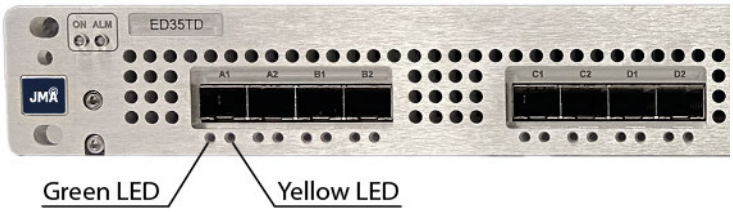

Green LED: Optical link status	
On	The optical link is operational
Off	The optical link is not able to achieve the operational status

Yellow LED: Alarm status of the remote unit connected to the port	
On	Critical or major alarms active on the connected remote unit
Blinking	Warning or minor alarms active on the connected remote unit
Off	No active alarms on the connected remote unit

This document contains JMA Wireless proprietary and/or confidential information.

- **Procedures**

  "Installing Master Unit DAS Components inside the Rack Cabinet" on page 67

  "Connecting the Next Generation Optical Transceiver to the Next Generation Remote Units" on page 79

  "Connecting RS485 Communication Cables" on page 74

  "Connecting External DC Power Supply" on page 94

  "Connecting Internal DC Power Supply" on page 88

  Note: You can connect the Next Generation Optical Transceivers to an external DC power source (see "Connecting External DC Power Supply" on page 94), or to the DAS components providing power supply (see "Connecting Internal DC Power Supply" on page 88).

This document contains JMA Wireless proprietary and/or confidential information.

3.4.3 - Point-to-Point Link

The optical Point-to-Point link allows a separation distance between the master unit RF interface components and distant optical transceivers installed in remote locations. The deployment of optical Point-to-Point links allows a significant reduction in the number of fibers running over long distances.

Master Point-to-Point link components are installed at the master unit site, then connected, through an optical link, to secondary Point-to-Point link components, installed in remote locations.

Point-to-Point link components perform the RF-to-optical and optical-to-RF conversion, allowing the bidirectional transmission of signals over the connecting optical fiber.

The DAS Platform includes the following Point-to-Point link components:

- Master and Secondary plug-in Point-to-Point modules: TTRUPTPM and TTRUPTPS.
- Next Generation Master and Secondary Point-to-Point rack-mount units. The following table lists JMA next generation Point-to-Point components and provides electrical, environmental, and mechanical specifications:

Commercial Code		Operating Frequency Band	Power Supply	Weight	Dimensions (HxWxD) max volume	Operating Temperature Range	Non-condensing Relative Humidity
Master	Secondary						
ED35BDM	ED35BDS	3450–3550MHz	28–50Vdc	5.2kg (11.5lb)	19” - 1U, depth 330mm (13in)	-5°C to +55°C (+23°F to +131°F)	5%-85% Short period limit (max 96 hours): 5%-93%
ED35TDM	ED35TDS	3700–3980MHz					
ED35IDM	ED35IDS	3400–3800MHz					

This document contains JMA Wireless proprietary and/or confidential information.

3.4.3.1 - TTRUPTPM Master Point-to-Point Plug-in Module

Master Point-to-Point modules are installed at the master unit site.

- **Front Panel Description**

Led ON: module operating status

Off	module switched off
Green	power supply is present

RS485

RJ45 port for RS485 connection to the supervision module

DL UL

SC-APC port: Downlink/uplink optical port (laser apertures) from/ to the secondary Point to Point module

DL (LED): Optical transmitter operating status

Blinking Green	The module is reaching its operating temperature
Green	Optical output power is available
Orange	Optical output power is degradated (*Laser Warn* alarm)
Off	No optical output power (*Laser Fault* alarm)

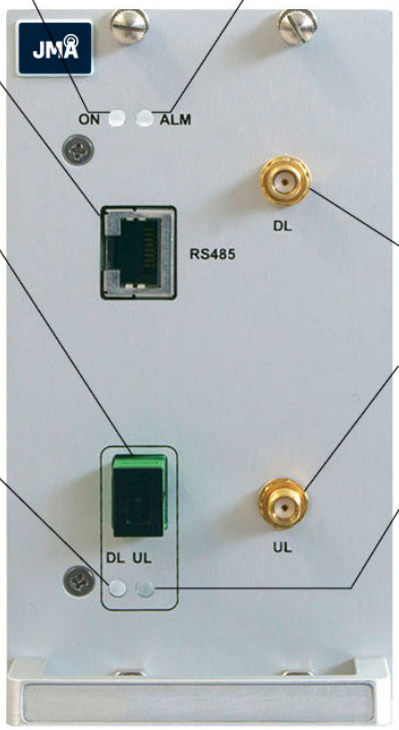

Led ALM: module alarm status

Off	no active alarms
Blinking Orange	maximum severity level of active alarms: **warning**
Orange	maximum severity level of active alarms: **minor**
Blinking Red	maximum severity level of active alarms: **major**
Red	maximum severity level of active alarms: **critical**

DL

Downlink RF input port (SMA-f connector)

UL

Uplink RF output port (SMA-f connector)

UL (LED): Optical receiver operating status

Green	No active alarms
Orange	Received optical power slightly below the operating range (*Rx Optical Warn* alarm)
Red	Received optical power is below (*Rx Optical Low* alarm) or above (*Rx Optical High* alarm) the operating range

- **Block Diagram**

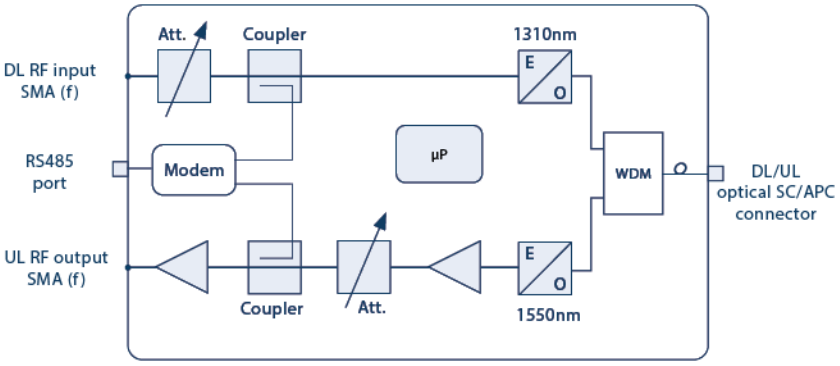

This document contains JMA Wireless proprietary and/or confidential information.

3.4.3.2 - TTRUPTPS - Secondary Point-to-Point Plug-in Modules

The secondary Point-to-Point modules are installed in remote sub-racks. Secondary Point-to-Point modules include a built-in supervision unit that controls the remote sub-rack with all connected remote units, and, when equipped, the power supply unit (SUB-PSUN-MU or SUB-PSUN-MU/48).

The DAS Platform supervision module communicates with the secondary Point-to-Point module's built-in supervision unit using the single-mode optical fiber connecting master and secondary Point-to-Point modules.

- **TTRUPTPSx-S Front Panel Description**

  TTRUPTPSx-S models include the four-way splitter/combiner to manage up to four optical modules.

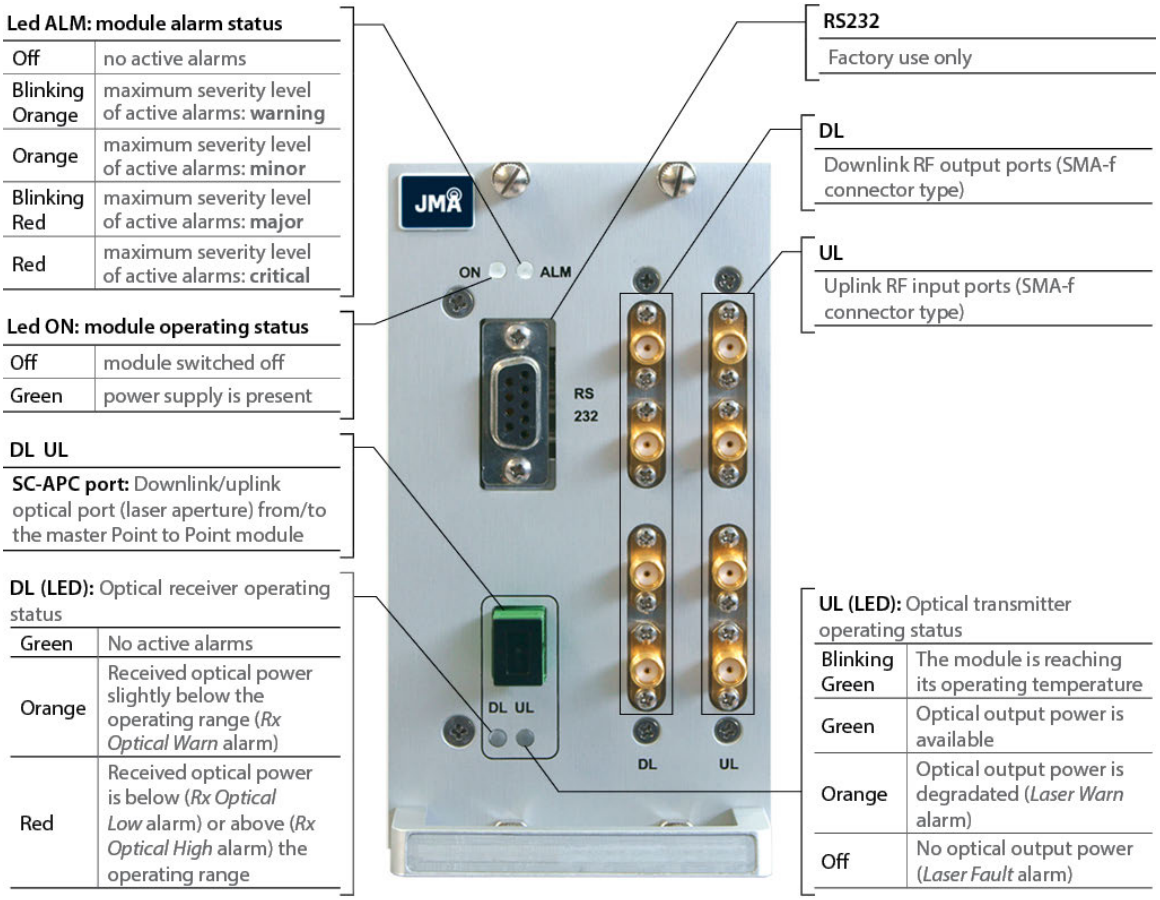

- **TTRUPTPSx-S Block Diagram**

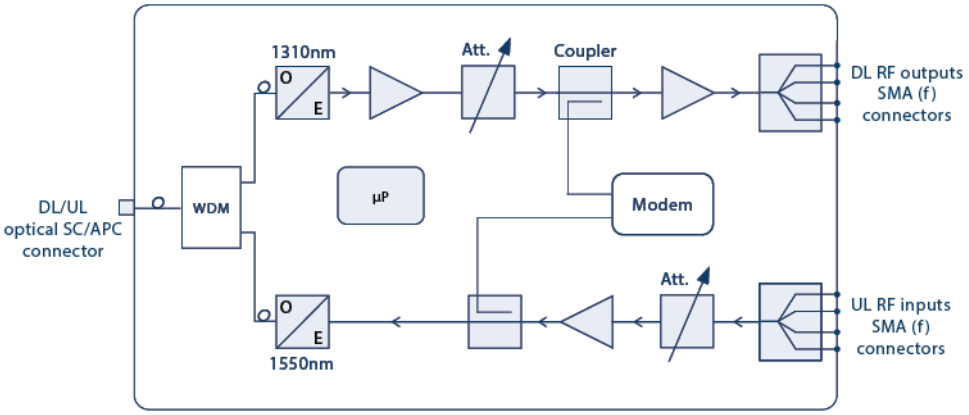

This document contains JMA Wireless proprietary and/or confidential information.

TTRUPTPSx-S-1 Front Panel Description

TTRUPTPSx-S-1 models do not include the four-way splitter/combiner.

Led ON: module operating status

Off	module switched off
Green	power supply is present

RS232

Factory use only

DL UL

SC-APC port: Downlink/uplink optical port (laser aperture) from/to the master Point to Point module

DL (LED): Optical receiver operating status

Green	No active alarms
Orange	Received optical power slightly below the operating range (*Rx Optical Warn* alarm)
Red	Received optical power is below (*Rx Optical Low* alarm) or above (*Rx Optical High* alarm) the operating range

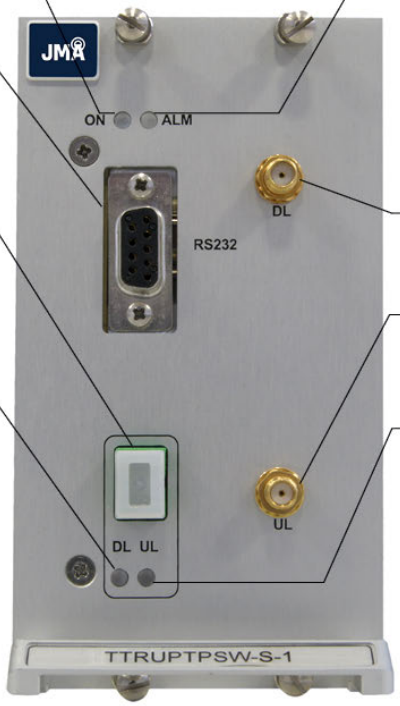

Led ALM: module alarm status

Off	no active alarms
Blinking Orange	maximum severity level of active alarms: **warning**
Orange	maximum severity level of active alarms: **minor**
Blinking Red	maximum severity level of active alarms: **major**
Red	maximum severity level of active alarms: **critical**

DL

Downlink RF output port (SMA-f connector type)

UL

Uplink RF input port (SMA-f connector type)

UL (LED): Optical transmitter operating status

Blinking Green	The module is reaching its operating temperature
Green	Optical output power is available
Orange	Optical output power is degradated (*Laser Warn* alarm)
Red	No optical output power (*Laser Fault* alarm)

Procedures

"Installing Master Unit Plug-in Modules Inside Sub-racks" on page 70

"Connecting Optical Components" on page 76

This document contains JMA Wireless proprietary and/or confidential information.

3.4.3.3 - Next Generation Master Point-to-Point Rack-mount Units

The next generation master Point-to-Point rack-mount units are installed at the master unit site.

Warning:

The next generation master Point-to-Point rack-mount units contain a non-replaceable battery so observe the following precautions:

- During use, storage, or transportation of the equipment, do not subject the battery to extreme conditions, such as:
  - An extremely high temperature surrounding environment.
    Note: The allowable temperature range is -40 to +85°C.
  - An extremely low air pressure.

  Exposing the battery to extreme conditions can result in an explosion or the leakage of flammable liquid or gas.
- Disposal of the battery into fire or a hot oven, or mechanically crushing or cutting of the battery, can result in an explosion.

Front Panel Description

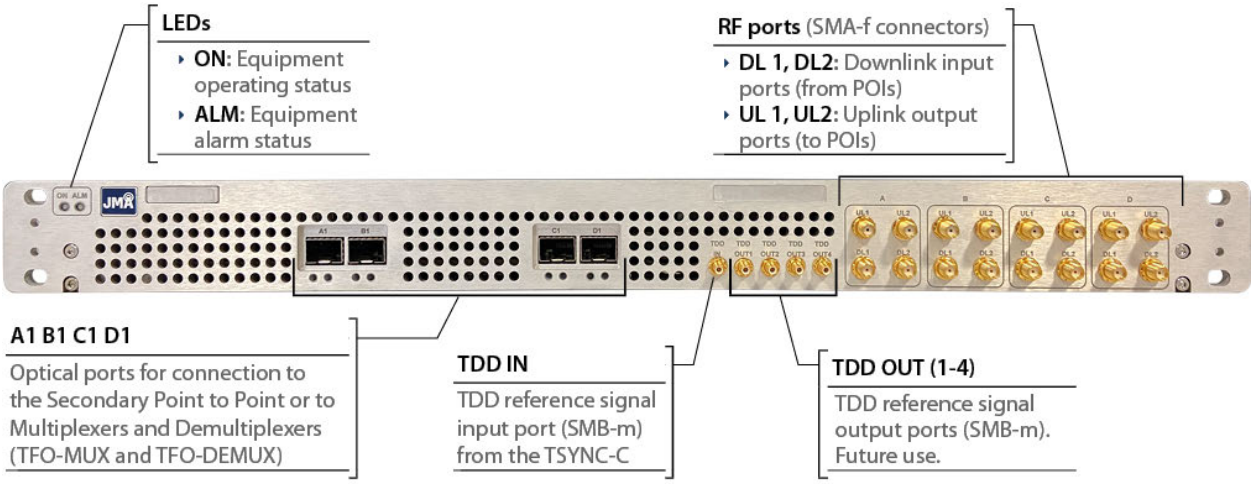

Rear Panel Description

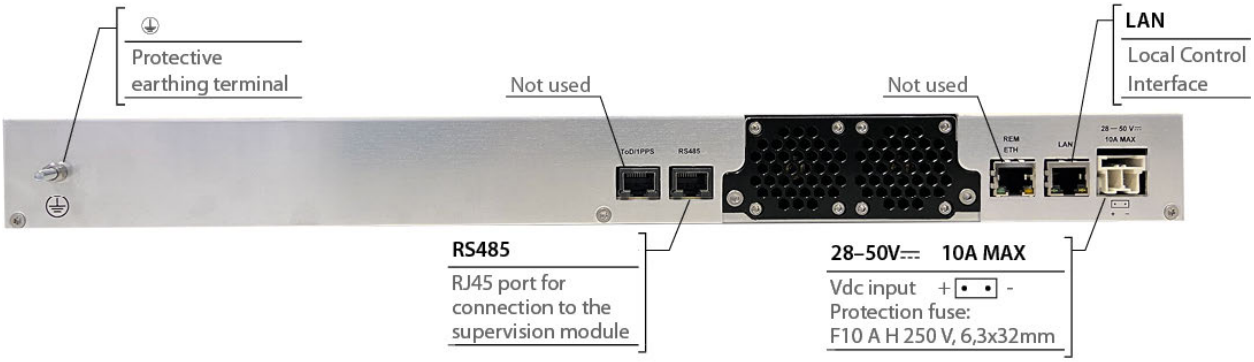

This document contains JMA Wireless proprietary and/or confidential information.

LEDs Description:

ON and ALM LEDs

ON: Equipment operating status	
Off	Equipment switched off
Green	Power supply is present

ALM: Equipment alarm status	
Off	No active alarms
Blinking Orange	Maximum severity level of active alarms: warning
Orange	Maximum severity level of active alarms: minor
Blinking Red	Maximum severity level of active alarms: major
Red	Maximum severity level of active alarms: critical

LEDs Below each Optical Port

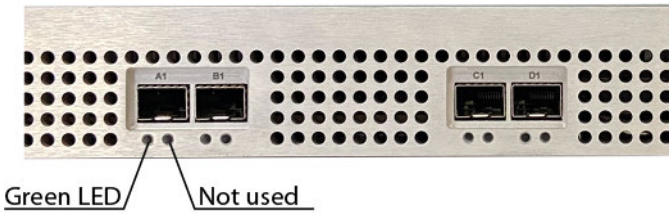

Green LED: Optical link status	
On	The optical link is operational
Off	The optical link is not able to achieve the operational status

Procedures

"Installing Master Unit DAS Components inside the Rack Cabinet" on page 67

"Connecting Optical Components" on page 76

"Connecting RS485 Communication Cables" on page 74

"Connecting External DC Power Supply" on page 94

"Connecting Internal DC Power Supply" on page 88

Note: You can connect the Next Generation Master Point-to-Point rack-mount units to an external DC power source (see "Connecting External DC Power Supply" on page 94), or to the DAS components providing power supply (see "Connecting Internal DC Power Supply" on page 88).

This document contains JMA Wireless proprietary and/or confidential information.

3.4.3.4 - Next Generation Secondary Point-to-Point Rack-mount Units

The next generation secondary Point-to-Point rack-mount units are installed in remote sub-racks.

Warning:

The Next Generation Secondary Point-to-Point rack-mount units contain a non-replaceable battery so observe the following precautions:

- During use, storage, or transportation of the equipment, do not subject the battery to extreme conditions, such as:
  - An extremely high temperature surrounding environment.
    Note: The allowable temperature range is -40 to +85°C.
  - An extremely low air pressure.

  Exposing the battery to extreme conditions can result in an explosion or the leakage of flammable liquid or gas.
- Disposal of the battery into fire or a hot oven, or mechanically crushing or cutting of the battery, can result in an explosion.

Note: The next generation secondary Point-to-Point components do **not** include a built-in supervision unit. They are managed by the supervision module installed at the remote location.

Front Panel Description

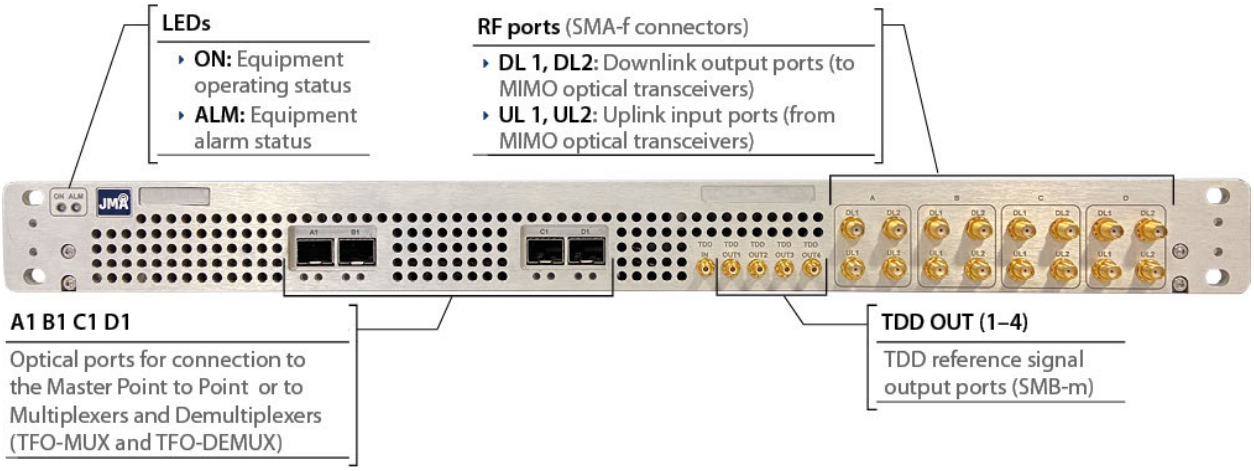

Rear Panel Description

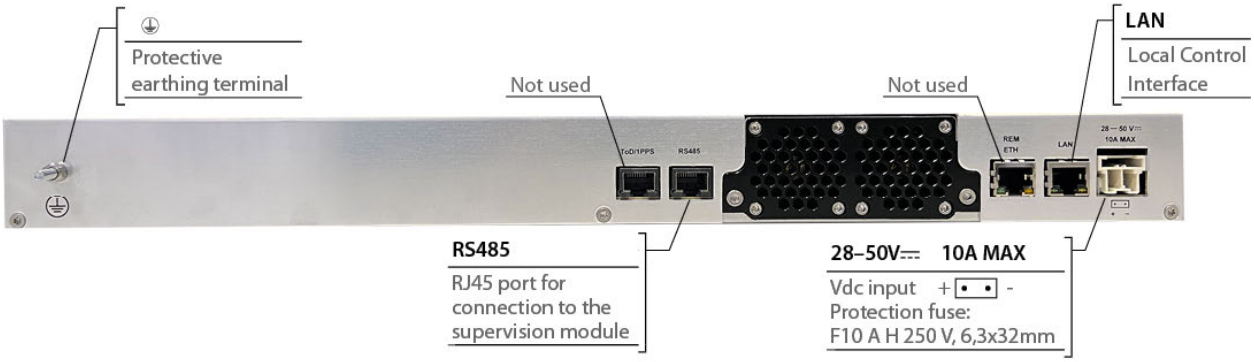

This document contains JMA Wireless proprietary and/or confidential information.

LEDs Description:

ON and ALM LEDs

ON: Equipment operating status	
Off	Equipment switched off
Green	Power supply is present

ALM: Equipment alarm status	
Off	No active alarms
Blinking Orange	Maximum severity level of active alarms: warning
Orange	Maximum severity level of active alarms: minor
Blinking Red	Maximum severity level of active alarms: major
Red	Maximum severity level of active alarms: critical

LEDs Below each Optical Port

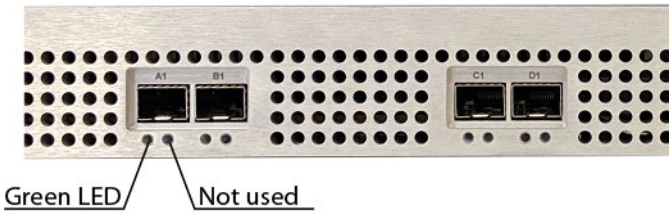

Green LED: Optical link status	
On	The optical link is operational
Off	The optical link is not able to achieve the operational status

Procedures

"Installing Master Unit DAS Components inside the Rack Cabinet" on page 67

"Connecting Optical Components" on page 76

"Connecting RS485 Communication Cables" on page 74

"Connecting External DC Power Supply" on page 94

"Connecting Internal DC Power Supply" on page 88

Note: You can connect the Next Generation Secondary Point-to-Point rack-mount units to an external DC power source (see "Connecting External DC Power Supply" on page 94), or to the DAS components providing power supply (see "Connecting Internal DC Power Supply" on page 88).

This document contains JMA Wireless proprietary and/or confidential information.

3.5 - Coverage Extension and Capacity Distribution

The DAS Platform components for coverage extension and capacity distribution are the following:

- Service Front End – A single-band/multi-operator interface towards a Service Antenna equipped in the master unit. See "TSFE" below.
- Remote units – Multi-carrier equipment connected to the master unit optical components and distributed throughout the territory to be served. For detailed descriptions of remote units refer to the following guides:
  - *JMA DAS Platform Remote Units Installation Guide*
  - *JMA DAS Platform Next Generation Remote Units Installation Guide*

3.5.1 - TSFE

Service Front End

The JMA Service Front End is a single-band, multi-operator rack-mount unit, driven by Digital Donor Front End modules and connected to the Service Antenna/leaky cable to provide wireless signal to the area to be covered.

You can set up a single-band, single-operator modular off-air repeater by combining a Digital Donor Front End and a Service Front End. You can connect up to four Donor Front End modules to a single Service Front End to provide a single-band four-operator repeater.

You can also use the Service Front End in optical systems to provide coverage to the area adjoining the master unit site.

- **TSFE Block Diagram**

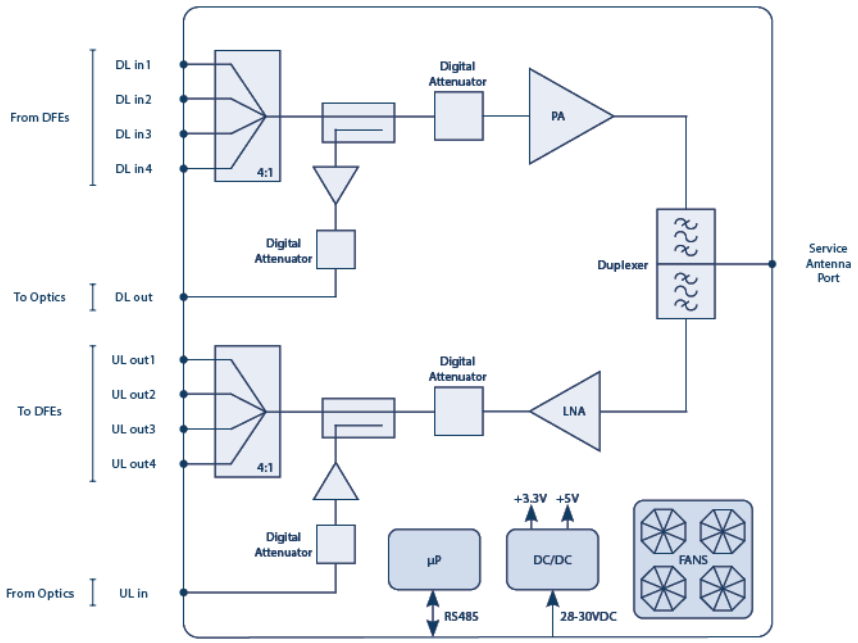

The TSFE hosts the duplexer, to be connected to the Service Antenna to separate or combine downlink and uplink paths. In the downlink, the signals from the Donor Front-End Modules are combined and amplified by a Power Amplifier. In the uplink, the RF signal from the Service antenna is amplified by a Low Noise Amplifier (LNA) and split to feed up to four Donor Front-End modules.

Auxiliary ports are available to drive an optical DAS.

This document contains JMA Wireless proprietary and/or confidential information.

TSFE Front Panel Description

LED: Service Front End alarm status

Off	no active alarms
Blinking Orange	maximum severity level of active alarms: **warning**
Orange	maximum severity level of active alarms: **minor**
Blinking Red	maximum severity level of active alarms: **major**
Red	maximum severity level of active alarms: **critical**

DL UL DFE1, DFE2, DFE3, DFE4

DFE1	DL	Downlink RF input from TDFE 1 (SMA-f connector)
	UL	Uplink RF output to TDFE 1 (SMA-f connector)
DFE2	DL	Downlink RF input from TDFE 2 (SMA-f connector)
	UL	Uplink RF output to TDFE 2 (SMA-f connector)
DFE3	DL	Downlink RF input from TDFE 3 (SMA-f connector)
	UL	Uplink RF output to TDFE 3 (SMA-f connector)
DFE4	DL	Downlink RF input from TDFE 4 (SMA-f connector)
	UL	Uplink RF output to TDFE 4 (SMA-f connector)

Procedures

"Installing Master Unit DAS Components inside the Rack Cabinet" on page 67

"Connecting RF Cables" on page 73

"Connecting Internal DC Power Supply" on page 88

This document contains JMA Wireless proprietary and/or confidential information.

3.6 - Control and Management

3.6.1 - TSPV

Supervision Module

Warning:

The supervision module contains a non-replaceable battery so observe the following precautions:

- During use, storage, or transportation of the equipment, do not subject the battery to extreme conditions, such as:
  - An extremely high temperature surrounding environment.
    Note: The allowable temperature range is -30 to +80°C.
  - An extremely low air pressure.

  Exposing the battery to extreme conditions can result in an explosion or the leakage of flammable liquid or gas.
- Disposal of the battery into fire or a hot oven, or mechanically crushing or cutting of the battery, can result in an explosion.

A single JMA supervision module allows the control and management of the active sub-rack where the supervision module resides, up to an additional 13 master unit sub-racks and rack-mount units, and all connected remote units.

Two models of supervision modules are available: TSPV-E and TSPV-N. **TSPV-N modules are required to manage systems that include next generation remote units.**

Note: When the DAS includes next generation Point-to-Point links, the DAS components installed at the master unit location and the DAS components installed at the remote location are managed by two separate supervision modules.

The supervision module communication interfaces allow the DAS components to be managed using either a Local Maintenance Terminal (LMT), connected locally to the supervision module LAN port, or a Network Element Manager (NEM). The connection to the NEM can be either a physical (Ethernet WAN) or a modem connection (optional).

The following options are available:

- Wireless modem – Supervision modules with the optional built-in wireless modem allow the remote management of the DAS components.
- Energy backup – Supervision modules with the optional integrated energy backup provide four-minute autonomy, in the event of a power outage.

This document contains JMA Wireless proprietary and/or confidential information.

Front Panel Description

The following figure describes the connectors and LEDs on the supervision module:

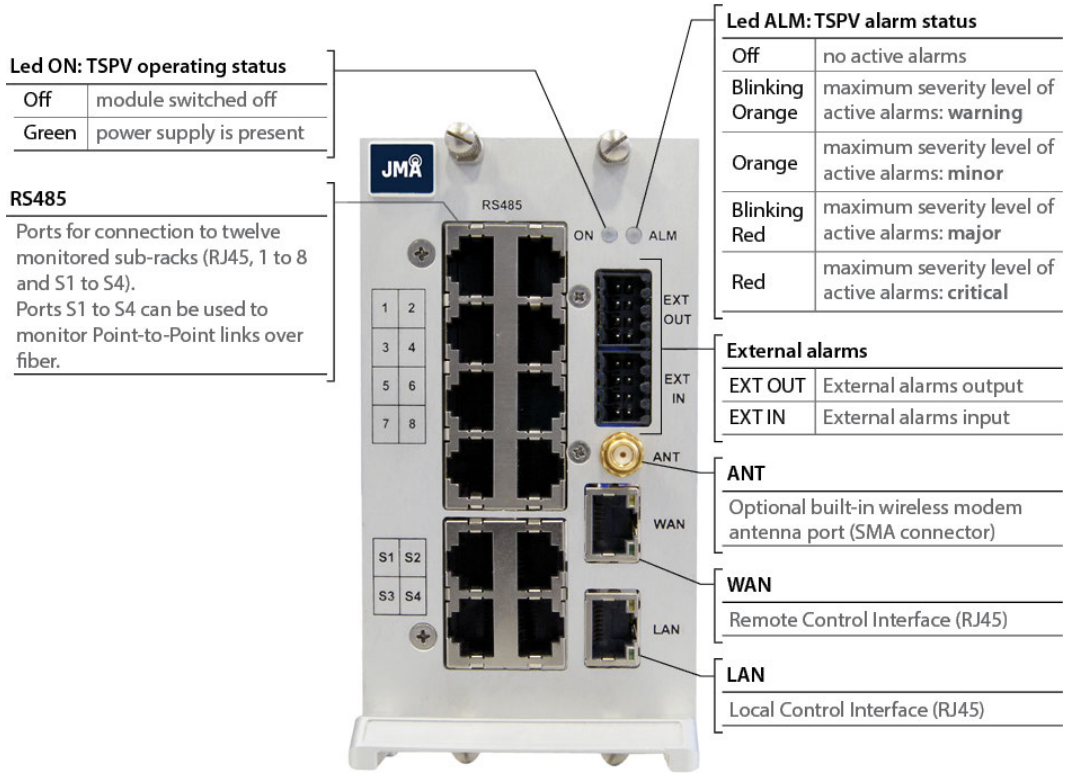

When all 12 front ports are connected to monitored devices, an additional power supply unit (SUB-PSUN-MU or SUB-PSUN-MU/48) can be monitored through the RS485 (RJ45) rear port of the sub-rack that hosts the supervision module. See "Connecting RS485 Communication Cables" on page 74.

Procedures

"Installing Master Unit Plug-in Modules Inside Sub-racks" on page 70

"Connecting RS485 Communication Cables" on page 74

"Connecting External Alarms" on page 98

This document contains JMA Wireless proprietary and/or confidential information.

3.6.2 - TEA-I16

External Alarm Module

The TEAI16 alarm module can be used to increase the number of supported external alarms. There are 16 external alarm inputs available on the TEA-I16 front panel.

The 16 input lines are opto-isolated and are activated by a short circuit between input pins (max current flow during short = 6mA; max Vdc at input pins = 3,3V).

- **Front Panel Description**

The following figure describes the ports and LEDs on the TEAI16 alarm module:

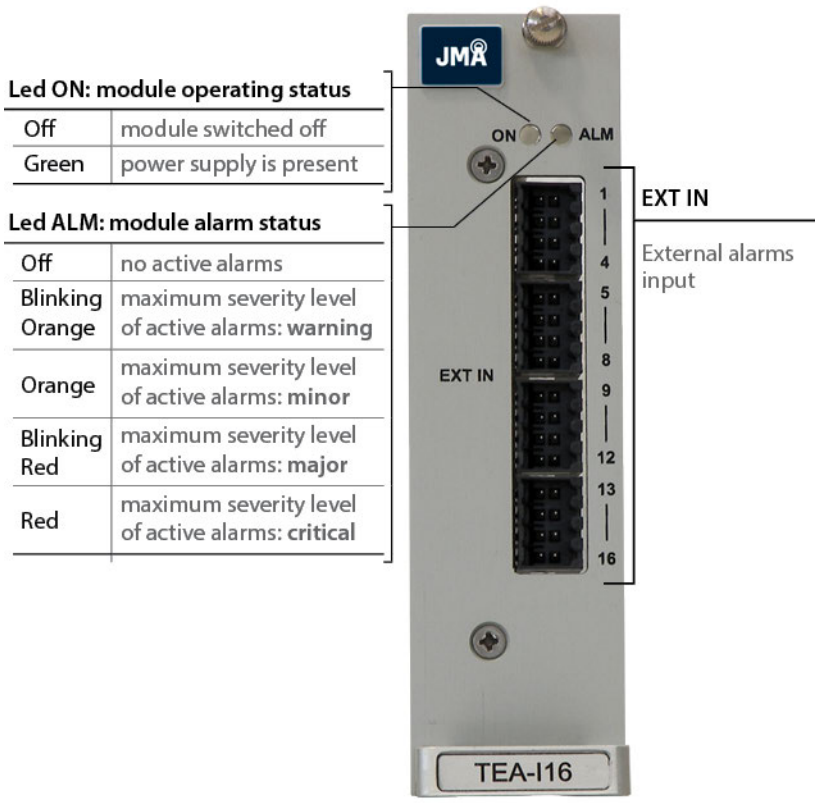

- **Procedures**

"Installing Master Unit Plug-in Modules Inside Sub-racks" on page 70

"Connecting External Alarms" on page 98

This document contains JMA Wireless proprietary and/or confidential information.

3.7 - Power Supply

Two options are available to power up the DAS Platform master unit components:

- TPSU/AC and TPSU/48 – AC or DC power supply plug-in modules to be installed inside SUB-TRX-PSU5N sub-racks. See "TPSU/AC and TPSU/48" below.
- SUB-PSUN-MU and SUB-PSUN-MU/48 – Space efficient, rack-mount, AC-to-DC and DC-to-DC power supply units, which provide up to 2.4kW (AC/DC) / 2.85kW (DC/DC) maximum output power in just one height unit space. See "SUB-PSUN-MU and SUB-PSUN-MU/48" on page 53.

The most suitable solution can be selected according to the system total power consumption and to the installation requirements.

A power supply distribution system is available for the remote powering of JMA 48Vdc remote units with up-to-2W output power. See "Remote Power Supply Distributor" on page 56.

3.7.1 - TPSU/AC and TPSU/48

TPSU/AC and TPSU/48 are JMA AC-to-DC and DC-to-DC plug-in power supply modules that provide up to 100W output power to the DAS Platform active components.

You can connect TPSU modules in parallel to obtain the power required by the system.

The following output power is delivered by each module:

- 100W, up to two modules in parallel
- 90W, three to four modules in parallel
- 80W, more than four modules in parallel

Hot-plug 1+1 redundancy feature is supported to achieve high system reliability.

The following figures describe the ports and LEDs on the TPSU modules:

- **TPSU/AC Front Panel Description**

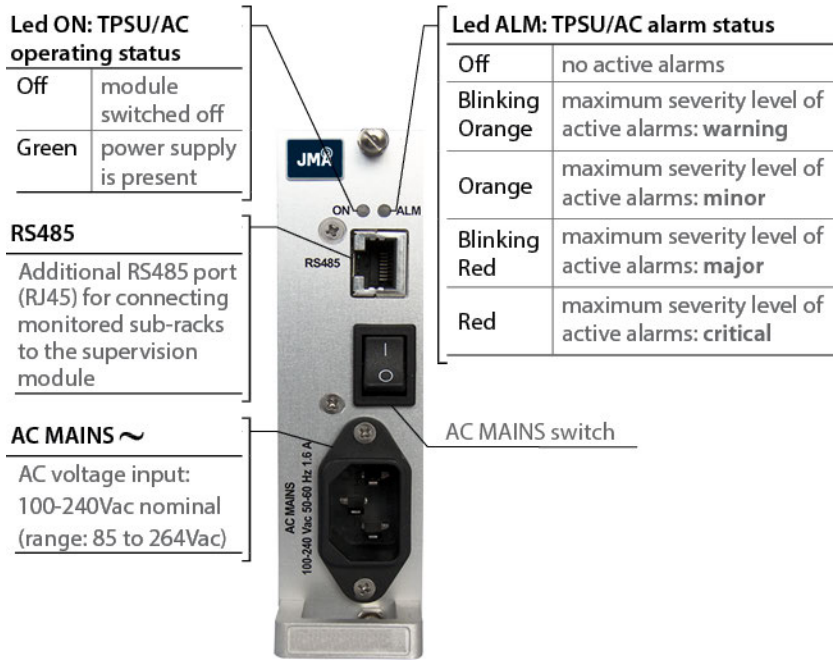

This document contains JMA Wireless proprietary and/or confidential information.

TPSU/48 Front Panel Description

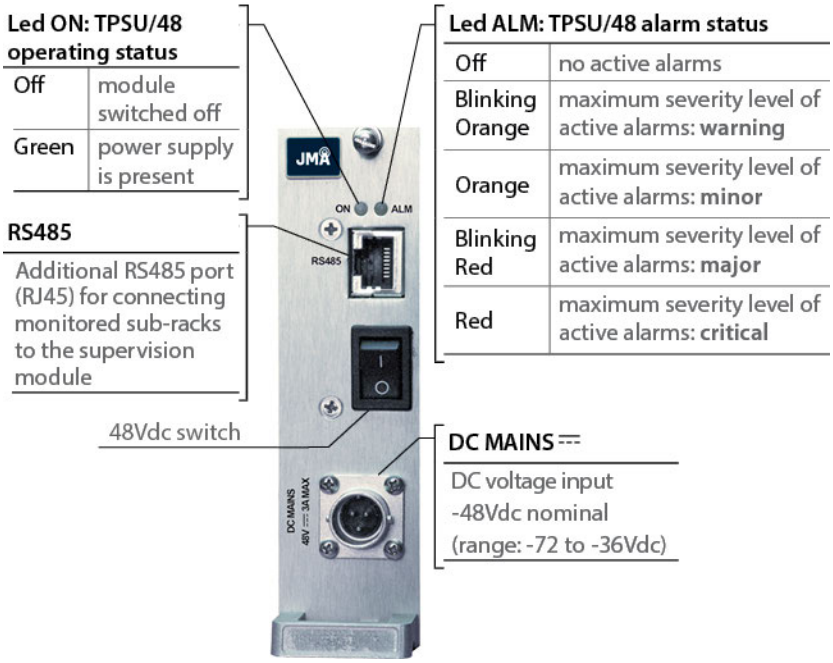

TPSU/48 – Protection Fuse Position and Electrical Rating

The following figure shows the TPSU/48 protection fuse position and electrical rating:

Note: If the fuse blows, it must be replaced.

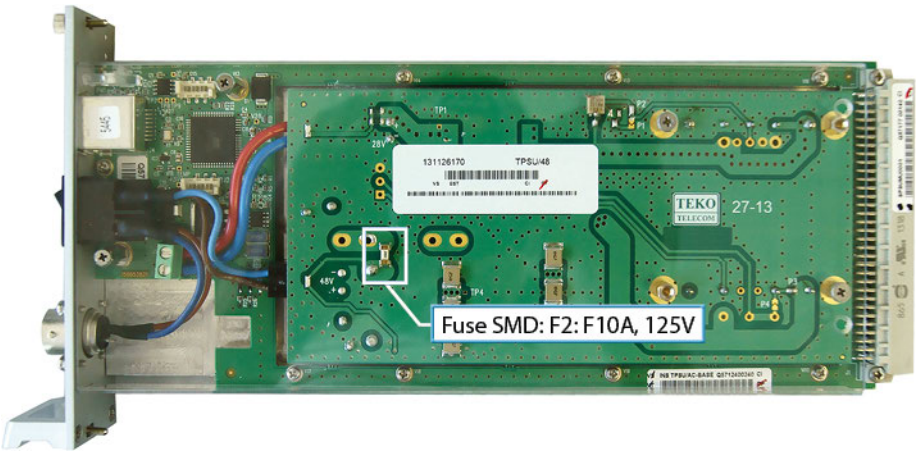

Procedures

"Installing Master Unit Plug-in Modules Inside Sub-racks" on page 70
"Connecting RS485 Communication Cables" on page 74
"Connecting Internal DC Power Supply" on page 88
"Connecting External AC Power Supply" on page 91
"Connecting External DC Power Supply" on page 94

This document contains JMA Wireless proprietary and/or confidential information.

3.7.2 - SUB-PSUN-MU and SUB-PSUN-MU/48

SUB-PSUN-MU and SUB-PSUN-MU/48 are JMA space-efficient, rack-mount, AC-to-DC and DC-to-DC power supply units. For large systems, the SUB-PSU units allow a reduction in the amount of space required for the DAS installation, providing up to 2.4kW (SUB-PSUN-MU) / 2.85kW (SUB-PSUN-MU/48) maximum output power in just one height unit space.

Hot-plug 1+1 redundancy feature is supported. You can install load-sharing power supply modules to achieve high system reliability. Hot-plugging allows a faulty power supply module to be replaced without powering off the system.

The power supply sub-racks allow the reset of the entire master unit using the DAS Platform management tools (Supervision module web interface and OMC proprietary software).

▪ SUB-PSUN-MU Front Panel Description

The SUB-PSUN-MU, rack-mount, AC-to-DC power supply unit can be equipped with up to three AC/DC power supply modules, TPSU/AC-30-1K, to provide up to 2.4kW output power.

Note: AC/DC power supply modules (TPSU/AC-30-1K) can be equipped in the SUB-PSUN-MU sub-rack only.

The following figure describes the ports and LEDs on the SUB-PSUN-MU:

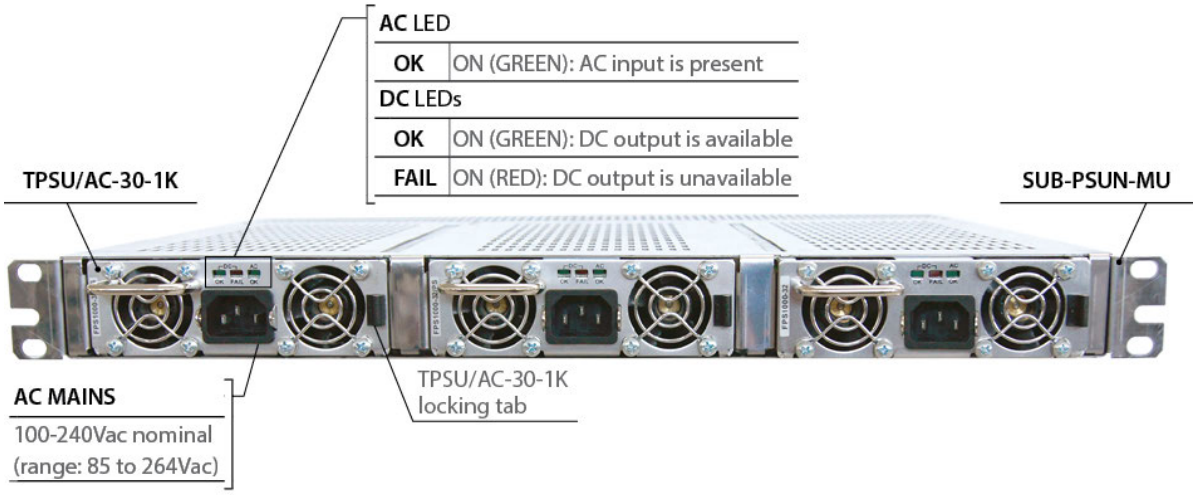

This document contains JMA Wireless proprietary and/or confidential information.

SUB-PSUN-MU/48 Front Panel Description

The SUB-PSUN-MU/48, rack-mount, DC-to-DC power supply unit can be equipped with up to three DC/DC power supply modules, TPSU/48-30-1K, to provide up to 2.85kW output power.

Note: DC/DC power supply modules (TPSU/48-30-1K) can be equipped in the SUB-PSUN-MU/48 sub-rack only.

The following figure describes the ports and LEDs on the SUB-PSUN-MU/48:

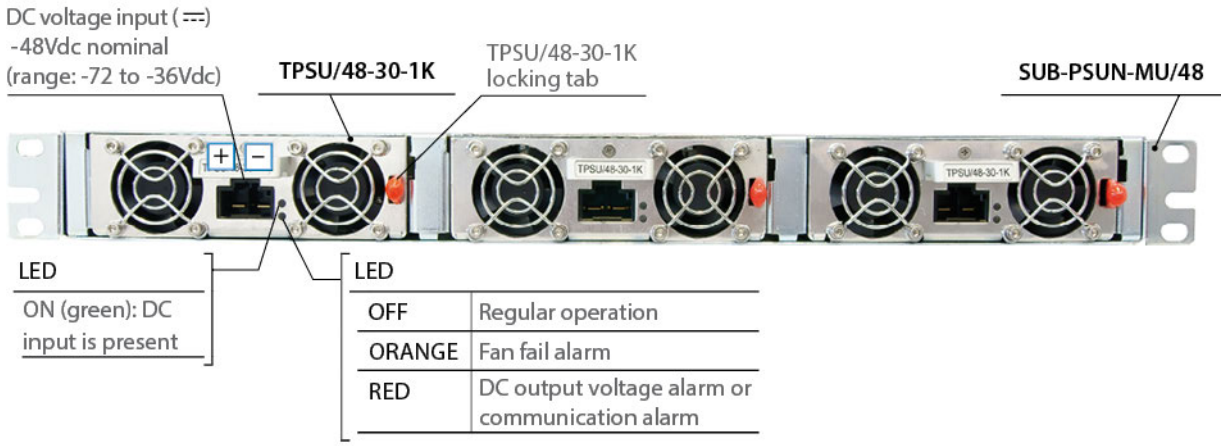

SUB-PSUN-MU/48 Protection Fuses

Each DC input is protected by fuses.

The following figure shows the position and electrical rating of input protection fuses:

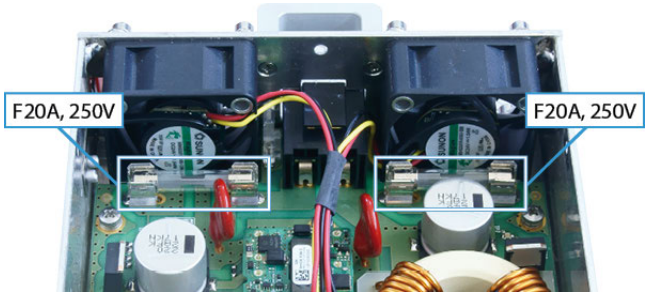

This document contains JMA Wireless proprietary and/or confidential information.

SUB-PSUN-MU and SUB-PSUN-MU/48 Rear Panel Description

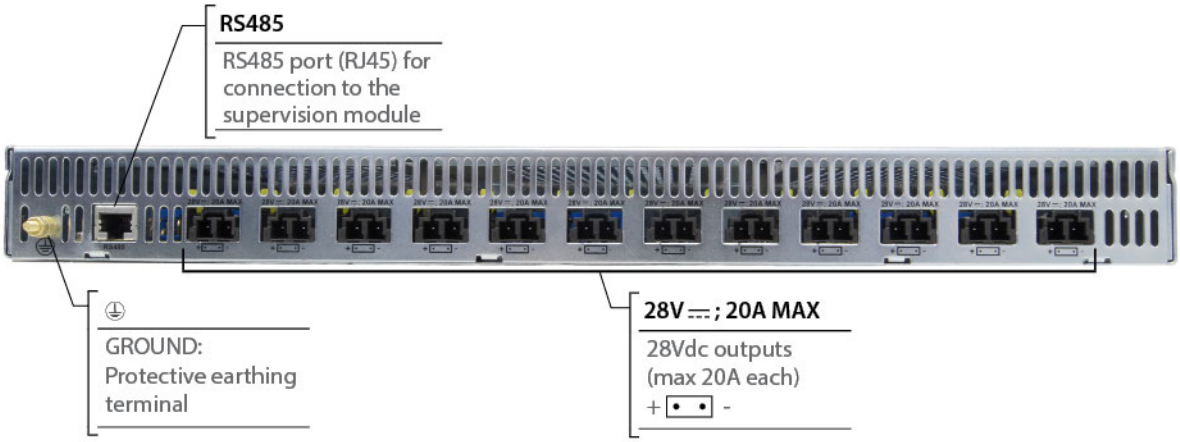

Each Vdc output connector is protected by a fuse. If a fuse blows, the green LED next to the connector switches off and the output voltage alarm for the connector is triggered (See the *JMA DAS Platform Troubleshooting Charts*).

Note: A blown fuse must be replaced.

The following figure shows a close-up detail of the 28Vdc output protection fuse and operating status LED:

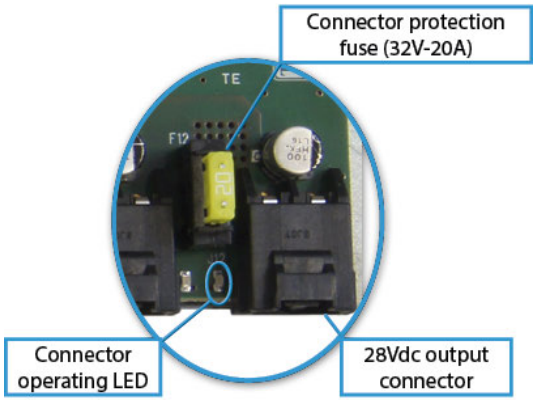

Note: To disconnect a power cable, first press the connector release tab, then pull the cable out.

Procedures

"Installing Master Unit DAS Components inside the Rack Cabinet" on page 67
"Connecting Internal DC Power Supply" on page 88
"Connecting External AC Power Supply" on page 91
"Connecting External DC Power Supply" on page 94
"Replacing Faulty Components" on page 102

This document contains JMA Wireless proprietary and/or confidential information.

3.7.3 - Remote Power Supply Distributor

A power supply distribution system is available for the remote powering of JMA 48Vdc remote units with up-to-2W output power.

The power supply distributor is composed of a Power Supply Unit (PSU) and a Power Distribution Unit (PDU), housed in a 2U-19” sub-rack.

The power supply unit can host up to four current-sharing power supply modules (either AC/DC or DC/DC). The configuration allows hot-swapping and supports N+1 redundancy configurations. The voltage from the power supply modules is made available to the 32 DC output ports on the PDU front panel.

A Class 2 DC Distribution Unit version is available to meet the requirements of the US National Electrical Code (NEC). Class 2 distribution systems allow power supply cables to be installed throughout the building without the need of a conduit.

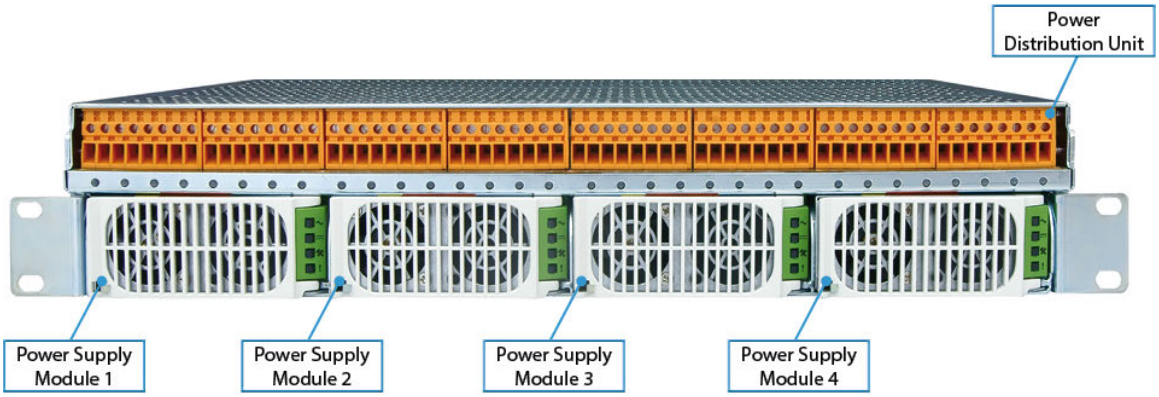

The following table lists the components of the power supply distributor:

Component	Commercial code	Description
Power supply modules (up to four)	TRPSU/AC-58-1.2k	AC/DC power supply module
	TRPSU/48-58-2k	DC/DC power supply module
Power Distribution Unit (PDU)	SUB-RPSU2-MU/AC	Class 2 DC Distribution Unit and Sub-rack
	SUB-RPSU2-MU/48	Class 2 DC Distribution Unit and Sub-rack
	SUB-RPSU-MU/AC	Standard DC Distribution Unit and Sub-rack
	SUB-RPSU-MU/48	Standard DC Distribution Unit and Sub-rack

This document contains JMA Wireless proprietary and/or confidential information.

3.7.3.1 - Power Supply Unit (PSU)

The power supply unit can host up to four current-sharing power supply modules, either AC/DC or DC/DC.

There are four LED indicators on the front panel of each power supply module.

The following figure provides an example of a Power Supply Unit equipped with AC/DC power supply modules (TRPSU/AC-58-1.2k):

- **Front LEDs Description**

TRPSU/AC-58-1.2k, AC/DC Power Supply Module - LEDs Description

Symbol	Description
~	ON: input ok Blinking: input out of limits
⎓	ON: output ok Blinking: overload OFF: no DC output
🛠	ON: over-temperature warning Blinking: service
!	ON: fault

TRPSU/48-58-2k, DC/DC Power Supply Module - LEDs Description

Symbol	Description
⊖	ON: input ok Blinking: input out of limits
⊖→	ON: output ok Blinking: overload
🛠	ON: over-temperature warning Blinking: service
!	ON: fault

This document contains JMA Wireless proprietary and/or confidential information.

Rear Panel Description

SUB-RPSU2-MU/AC and SUB-RPSU-MU/AC

The following figure shows the power supply distribution system equipped with AC/DC power supply modules:

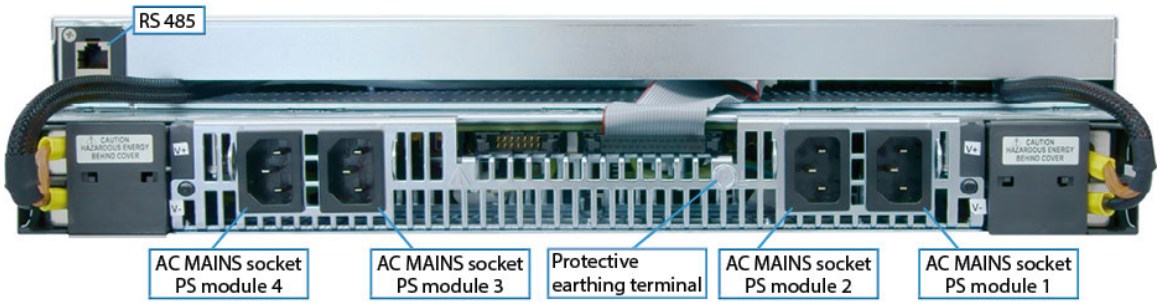

SUB-RPSU2-MU/48 and SUB-RPSU-MU/48

The following figure shows the power supply distribution system equipped with DC/DC power supply modules:

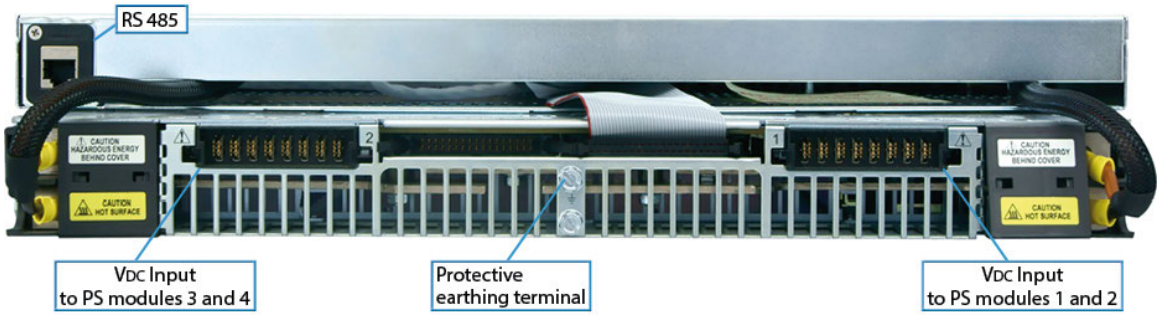

This document contains JMA Wireless proprietary and/or confidential information.

3.7.3.2 - Power Distribution Unit (PDU)

The following figure describes the ports and LEDs on the Power Distribution Unit (PDU):

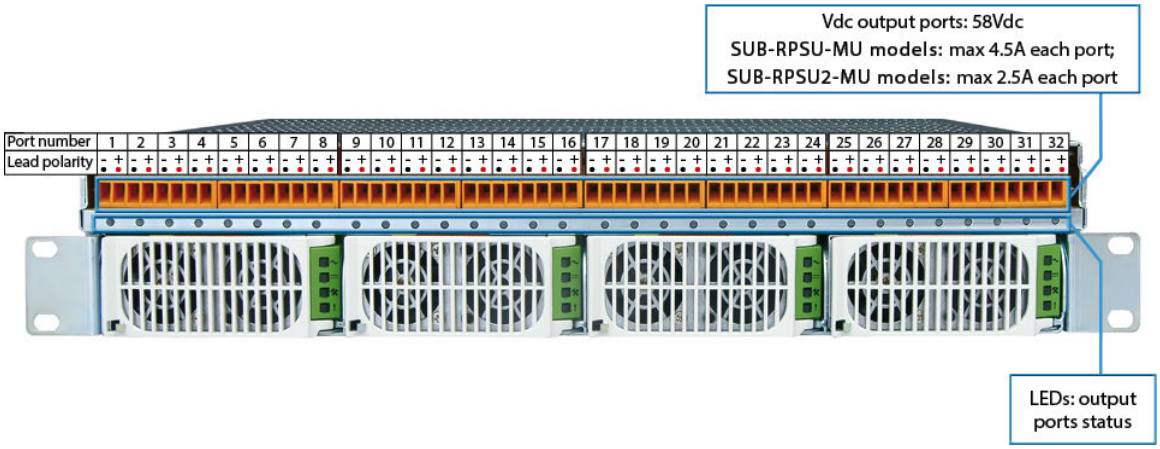

There are 32 LED indicators on the front panel of the PDU that show the status of each output port, as described in the following table:

Led status	Description
OFF	Switched off port
ON	Green: Regular operation
	Orange: The port is not operating properly. Current absorption out of range
	Red: No output voltage. Port hardware overload protection or broken fuse.

Note: Each DC output port is protected by a fuse. The following figure shows the position and electrical rating of protection fuses:

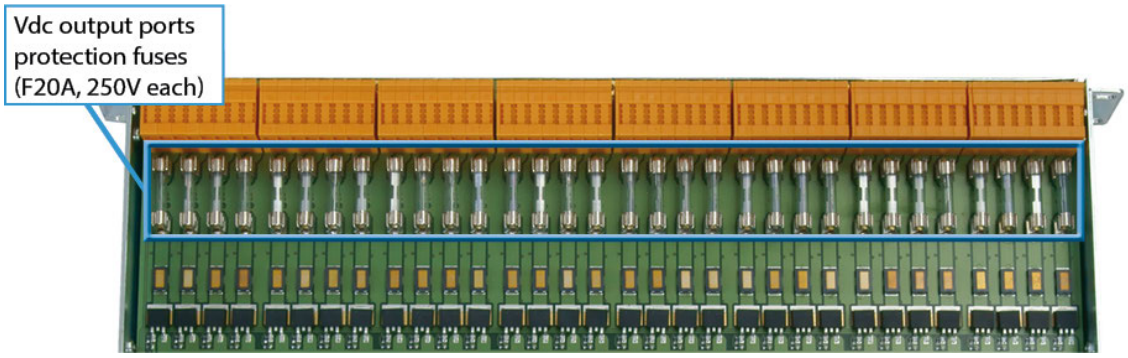

- **Procedures**

"Installing Master Unit DAS Components inside the Rack Cabinet" on page 67
"Connecting Internal DC Power Supply" on page 88
"Connecting External AC Power Supply" on page 91
"Connecting External DC Power Supply" on page 94
"Connecting DC Power to the Remote Power Supply Distribution System" on page 97
"Replacing Faulty Components" on page 102

This document contains JMA Wireless proprietary and/or confidential information.

3.8 - Sub-racks for the Installation of Plug-in Components

The following 19”-3U sub-racks are available to host the master unit 3U plug-in components.

- **SUB-TRX-PSU5N**

  The SUB-TRX-PSU5N is a 19”-3U sub-rack (depth: 270mm, 10.63in) with a backplane that allows the management and power supply of active modules. Twelve slots are available to install plug-in components. The slots are numbered from 1 to 12, left to right.

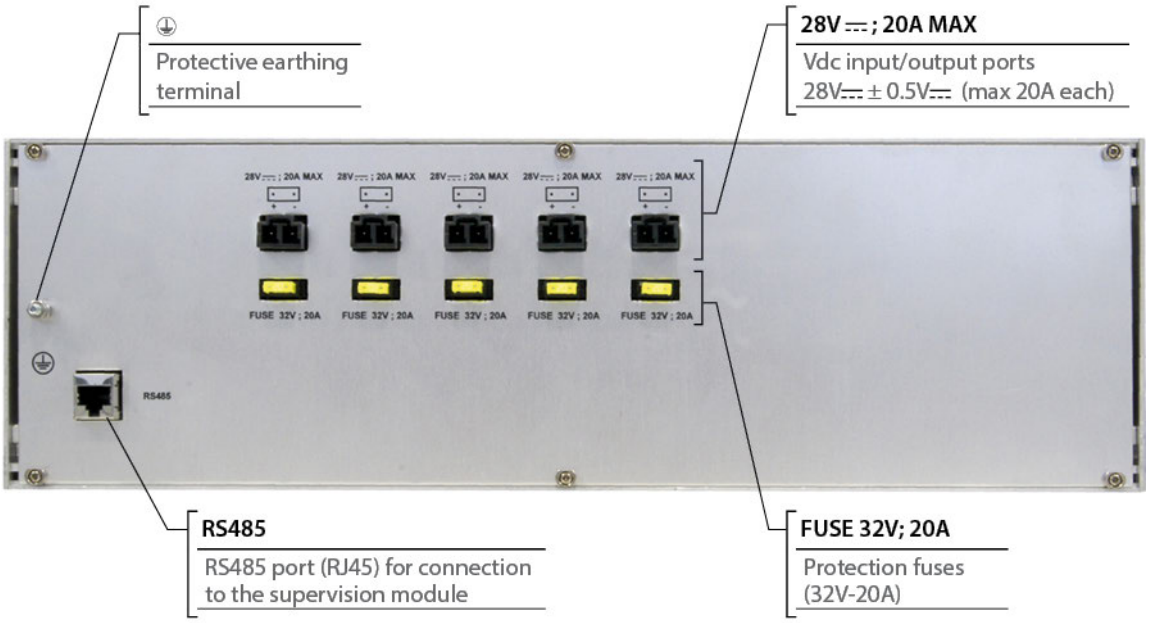

  The following connectors are available on the rear of the sub-rack:

  - Five 28Vdc input/output ports, each protected from current overload by a fuse.

    Note: To disconnect a power cable, first press the connector release tab, then pull the cable out.

  - The RJ45 port (RS485) for connection to the supervision module.

    Note: Do not insert any module in the slot 12 of the SUB-TRX-PSU5N sub-rack with the rear RS485 port connected to a SUB-PSUN-MU or SUB-PSUN-MU/48. See "Connecting RS485 Communication Cables" on page 74.

This document contains JMA Wireless proprietary and/or confidential information.

- ## SUB-TRX-PSU-D

  19”-3U, 360mm (14.17in) deep sub-racks are required to host full features Digital Donor Front End modules (TDFE-EGSM-F).

  Note: Extender boards are required to plug standard–depth modules into deep sub-racks.

Extender Board (TME-SUB-TRX-D)

- ## SUB-HPOI

  Modules that do not require power or management to function can be housed in SUB-HPOI sub-racks, allowing a reduction in the cost of the entire system.

- ## Procedures

"Installing Master Unit DAS Components inside the Rack Cabinet" on page 67

"Installing Master Unit Plug-in Modules Inside Sub-racks" on page 70

"Connecting RS485 Communication Cables" on page 74

"Connecting Internal DC Power Supply" on page 88

This document contains JMA Wireless proprietary and/or confidential information.

3.9 - Forced-air Cooling Unit

The JMA forced-air cooling, rack-mount unit TFAN-19-1U-4F-28V ensures the air flow required for proper operation of rack installed equipment. The unit can provide a maximum air flow of 180cfm (5m^3/min).

- **Front and Rear Panel Description**

  The following figure describes the ports and LEDs on the TFAN-19-1U-4F-28V:

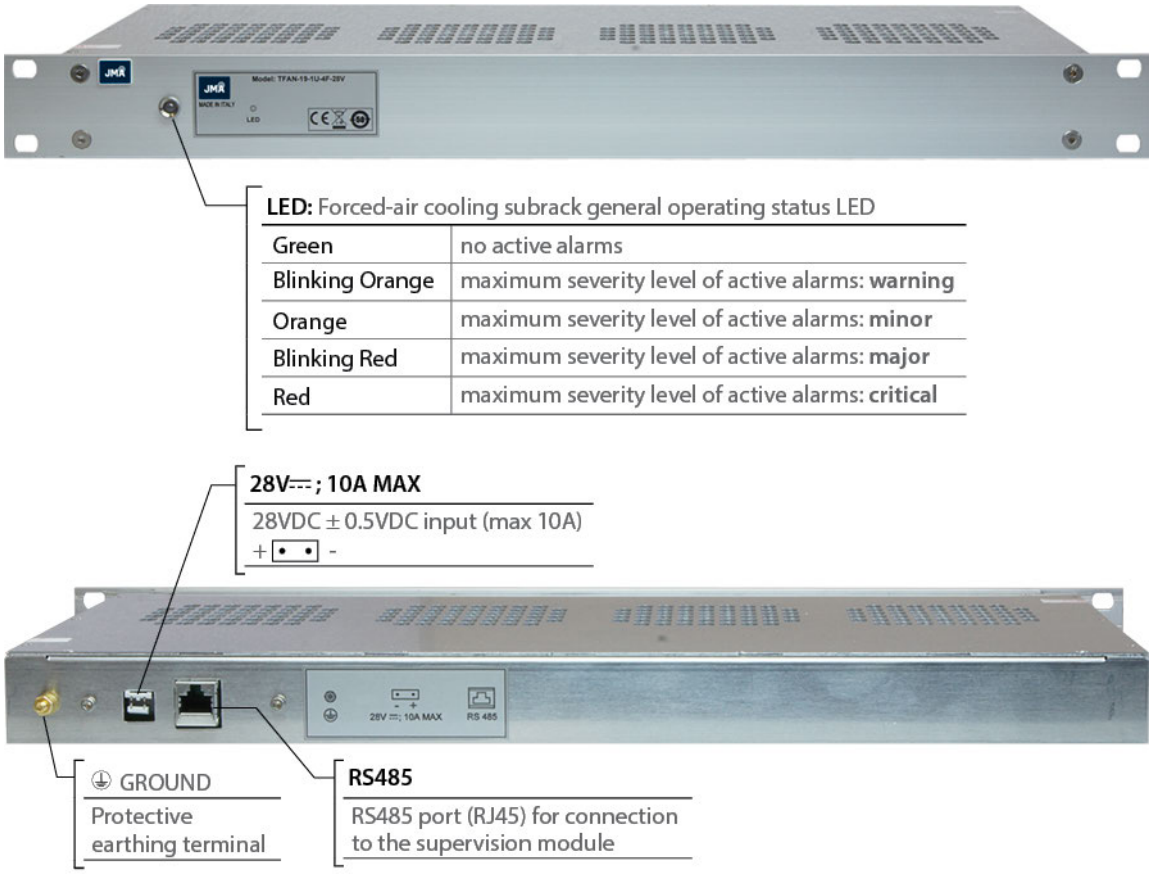

- **Procedures**

  "Installing Master Unit DAS Components inside the Rack Cabinet" on page 67
  "Connecting RS485 Communication Cables" on page 74
  "Connecting Internal DC Power Supply" on page 88

This document contains JMA Wireless proprietary and/or confidential information.

4 - Procedures

The following sections provide instructions for the physical installation, connection, preventive maintenance, and replacement of the master unit components. Each procedure provides instructions for a specific task and includes important precautions and warning statements.

It is important that, before starting work on any equipment, you read the "Safety Rules" on page 120 and the general warning statements referenced in each procedure.

- "Installing the Master Unit DAS Components" on page 65
  - "Precaution and Warning Statements" on page 65
  - "Installation Site Requirements" on page 65
  - "Installing Master Unit DAS Components inside the Rack Cabinet" on page 67
  - "Installing Master Unit Plug-in Modules Inside Sub-racks" on page 70
- "Connecting the Master Unit DAS Components" on page 72
  - "Precaution and Warning Statements" on page 72
  - "Connecting RF Cables" on page 73
  - "Connecting RS485 Communication Cables" on page 74
  - "Connecting Optical Components" on page 76
  - "Connecting the TCPRIPOI Module to the XRAN Server" on page 86
  - "Connecting Internal DC Power Supply" on page 88
  - "Connecting External AC Power Supply" on page 91
  - "Connecting AC Power to the Master Unit Power Supply Components" on page 92
  - "Connecting AC Power to the Remote Power Supply Distribution System" on page 93
  - "Connecting External DC Power Supply" on page 94
  - "Connecting DC Power to the Master Unit Power Supply Components" on page 95
  - "Connecting DC Power to the Remote Power Supply Distribution System" on page 97
  - "Connecting External Alarms" on page 98
  - "Switching on the Master Unit" on page 99
- "Performing Preventive Maintenance" on page 100
  - "Optical Fiber" on page 100
  - "Optical Connectors" on page 100
- "Replacing Faulty Components" on page 102
  - "Replacing Faulty Plug-in Modules" on page 102
  - "Replacing the TDFE Fan Kit" on page 105
  - "Replacing the Next Generation Optical Transceiver and Point-to- Point Components Fan Unit" on page 103

This document contains JMA Wireless proprietary and/or confidential information.

- "Replacing Faulty TPSU/AC-30-1K and TPSU/48-30-1K" on page 107
- "Replacing Faulty TRPSU/AC-58-1.2k and TRPSU/48-58-2k" on page 108

This document contains JMA Wireless proprietary and/or confidential information.

4.1 - Installing the Master Unit DAS Components

The following sections provide instructions for installation of the master unit DAS components.

Warning: It is important that before you start work on any equipment, you read:

- "Safety Rules" on page 120
- "Precaution and Warning Statements" below
- Specific precautions and warning statements provided in each procedure

4.1.1 - Installation Site Requirements

- Make sure that the installation site is safe, properly prepared, and air-conditioned to ensure that the equipment always operates in the proper temperature range.

  Refer to "Technical Specifications" on page 119.

  Note: Master unit components must be installed indoors or inside outdoor cabinets.
- Ensure that the equipment is not exposed to direct sunlight at any time.
- Verify that the installation site meets the space and electrical requirements for the installation and operation of the equipment.
- Ensure that you have enough room to comfortably unpack the equipment without risking damage prior to installation.
- Provide enough spacing in front of the equipment for the installation and maintenance of the equipment and to allow enough air to circulate.

4.1.2 - Precaution and Warning Statements

- A correct system installation and setting procedure requires a good knowledge of and experience in installing telecommunication equipment.
- To ensure proper installation and configuration, these activities should be performed by skilled and experienced personnel only.
- Before you install the equipment, carefully read the safety rules attached to this document. See "Safety Rules" on page 120.
- Before you start work on any equipment, make sure it is isolated from its power supply source.
- If not approved by JMA, repainting any components of the DAS voids the warranty.
- The equipment is intended to be installed in a Restricted Access Location (RAL) where the equipotential bonding has been applied. RAL is defined as a location for equipment where both of the following conditions apply:
  - Access can be gained only by SERVICE PERSONS or by USERS who have been instructed about the reasons for the restrictions applied to the location and about any precautions that shall be taken.
  - Access is gained using a TOOL or lock and key, or other means of security, and is controlled by the authority responsible for the location.
- In Denmark, Finland, Norway and Sweden, the equipment intended for connection to other equipment, or a network shall have a marking stating that the equipment must be connected to an

This document contains JMA Wireless proprietary and/or confidential information.

earthed mains socket outlet.

In Finland: “*Laite on liitettävä suojakoskettimilla varustettuun pistorasiaan*”.

In Norway: “*Apparatet må tilkoples jordet stikkontakt*”.

In Sweden: “*Apparaten skall anslutas till jordat uttag*”.

In Denmark: “*Apparatets stikprop skal tilsluttes en stikkontakt med jord, som giver forbindelse til stikproppens jord*”.

- The master unit housed inside a cabinet must be installed within a restricted access area only. This area must be protected by a security system that will exclude the entry, even if accidental, to unauthorized and untrained personnel. Alternatively, the cabinet in which the equipment is housed must be closed on all sides to allow the access to internal parts to authorized personnel only.

Caution: A cabinet cooling forced air ventilation system, able to provide an air flow of up to 180cfm ($5m^3$/min), is required to ensure the proper operation of equipment installed in a cabinet.

This document contains JMA Wireless proprietary and/or confidential information.

4.1.3 - Installing Master Unit DAS Components inside the Rack Cabinet

The following are the requirements and best practices for the correct installation of the master unit components inside rack cabinets.

Warning:

- The modular master unit must be positioned indoor to guarantee the protection of the equipment against atmospheric agents, humidity, and temperature changes. See "Technical Specifications" on page 119.
- If the modular master unit is installed outdoors, it must be installed in a cabinet, which guarantees the protection of the equipment against atmospheric agents, humidity, and temperature changes. See "Technical Specifications" on page 119.
- Before installation, make sure that all the components of the system are isolated from the main power supply.
- Make sure that the switches of all the power supply units equipped in the DAS are set to O (OFF).
- JMA recommends that you provide the system with a UPS (Uninterruptible Power Supply) unit to ensure the operation of equipment should the mains supply fail.

4.1.3.1 - Positioning the DAS Components

- Leave at least one rack unit width (1U) between active components for air flow to assure proper cooling.
- Strategically position the forced-air cooling units (TFAN-19-1U-4F-28V) to ensure higher air flow volume, where required (for example, adjacent to sub-racks hosting power supply modules, optical modules, or TCPRIPOIs).
- Whenever a TCPRIPOI is installed inside a sub-rack, you must install an adjacent forced-air cooling unit (TFAN-19-1U-4F-28V) above or below the sub-rack and leave at least one rack unit width space on the opposite part, to ensure proper air-flow volume.

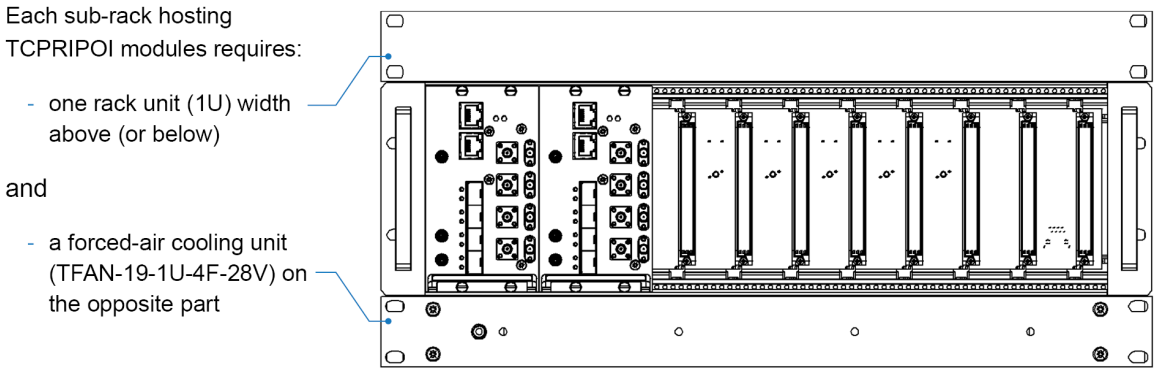

Note: When deploying a TCPRIPOI inside an existing DAS, always check the RF link budget; make sure the RF link budget remains unchanged if longer cables are required.

- To make connections easier, position the components as follows:
  - Install the Service Front End over the sub-rack(s) hosting RF interface modules (with TDFE sub-racks over POI sub-racks).
  - Install the sub-racks hosting RF interface modules and/ or passive components over optical sub-

This document contains JMA Wireless proprietary and/or confidential information.

racks or sub-racks hosting optical modules.

- Install the sub-racks hosting power supply modules in the lowest position.

4.1.3.2 - Installing the Rack-mount DAS Components

Note: Before installation, read the "Safety Rules" on page 120 and the "Precaution and Warning Statements" on page 65.

1. Fasten the rack cabinet to the site floor to prevent it from turning over.
2. Connect the rack cabinet to the station ground.
3. Mount the horizontal rails for support of the equipment.
4. Starting from the bottom, insert each rack-mount DAS component into the rails and slide it into position carefully.
   Note: At least one rack unit width is required between active components for air flow to ensure proper cooling. See "Positioning the DAS Components" on the previous page.
5. Fix each rack-mount component to the vertical mounting guides of the rack cabinet by inserting four M6x16 cylindrical cross-head screws into the proper slots.
6. Connect each rack-mount component to the rack cabinet ground bus bar.

   Protective earthing terminals are located on the back panel of the DAS components and can be identified by the following symbol: ⏚.

   The following figure shows a correct earth connection:

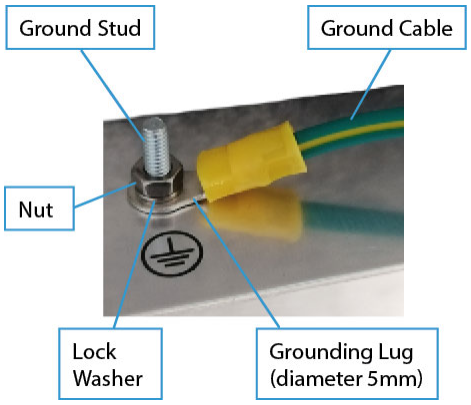

Note:

- A washer (preferably a star washer) must be used for anti-rotation.
- Only copper cables must be used for grounding purposes.
- Ground Stud:
  - M5X16 (or 5x20) for all components except Next Generation Optical Transceivers and Master and Secondary Point-to- Point Rack-mount Units
  - M4X16 (or 4x20) for Next Generation Optical Transceivers and Master and Secondary Point-to- Point Rack-mount Units
- Ground Cable:
  - The grounding conductor gauge is AWG 10 for all components except Next Generation Optical Transceivers and Master and Secondary Point-to- Point Rack-mount Units

This document contains JMA Wireless proprietary and/or confidential information.

- The grounding conductor gauge is AWG 14-12 for Next Generation Optical Transceivers and Master and Secondary Point-to- Point Rack-mount Units

This document contains JMA Wireless proprietary and/or confidential information.

4.1.4 - Installing Master Unit Plug-in Modules Inside Sub-racks

4.1.4.1 - Positioning Plug-in Modules

The following are the instructions for the correct positioning of the DAS plug-in modules inside the DAS sub-racks:

- Do not insert any module in the slot 12 of a SUB-TRX-PSU5N with the rear RS485 port to be connected to a SUB-PSUN-MU or SUB-PSUN-MU/48. See "Connecting RS485 Communication Cables" on page 74.
- Left to right, install the TRPSU/AC-58-1.2k and TRPSU/48-58-2k power supply modules to be equipped inside the power supply distribution system (SUB-RPSUx).
- To make connections easier, install and connect one TDTPOI at a time. Also, install adjacent TDTPOIs right-to-left or left-to-right.
- Point-to-Point link: When the remote sub-rack is equipped with two or three secondary Point-to-Point plug-in modules, insert only one secondary module in slots 1 to 6. The module installed in this position communicates with the DAS supervision module. Install the other PTP secondary modules in slots 7 to 12.
- The SUB-TRX-PSU-D, 19”-3U, 360mm (14.17in) deep sub-rack, is required to host full features Digital Donor Front End modules (TDFE-EGSM-F). Extender boards are required to plug standard-depth modules into deep sub-racks. See "Sub-racks for the Installation of Plug-in Components" on page 60.
- Always make sure that the DAS is equipped with the same type of power supply modules (same commercial code on handles).

4.1.4.2 - Installing Plug-in Modules Inside the 19”-3U Sub-racks

Note: Before installation, read the "Safety Rules" on page 120 and the "Precaution and Warning Statements" on page 65.

- **All Plug-in Modules, except TDTPOIs**

To install plug-in modules:

1. Insert each module into the sub-rack until it is fully seated in the slot.
2. Tighten the screws on the module front panel to fasten the module to the sub-rack.

Note: In active sub-racks, guide rails are clipped in. If necessary, pull to remove them.

- **Supervision Module with Built-in Optional Wireless Modem**

When the DAS supervision module is equipped with the built-in optional wireless modem, prior to installing the module inside the sub-rack, insert the SIM card, as described in the following procedure:

This document contains JMA Wireless proprietary and/or confidential information.

SIM Card Installation

Note: The SIM card must be enabled for data transfer and preferably unlocked (PIN code disabled).

To insert the SIM card:

1. Place the supervision module on a stable surface.
2. Locate the SIM card slot.

   The following figure shows the position of the SIM card holder:

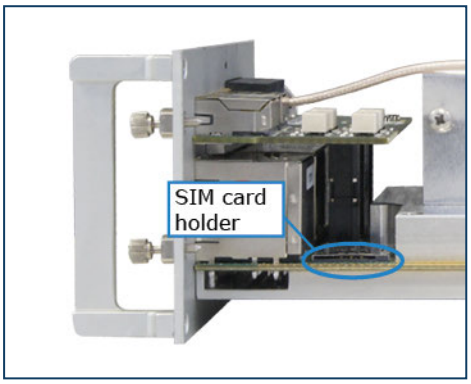

3. Insert the SIM card into the SIM slot, with the gold contacts facing down and the clipped corner going in first.
4. Gently push the SIM card into the slot until it clicks into place.

- **TDTPOIs**

To make connections easier, install and connect one TDTPOI at a time. Also, install adjacent TDTPOIs right-to-left or left-to-right.

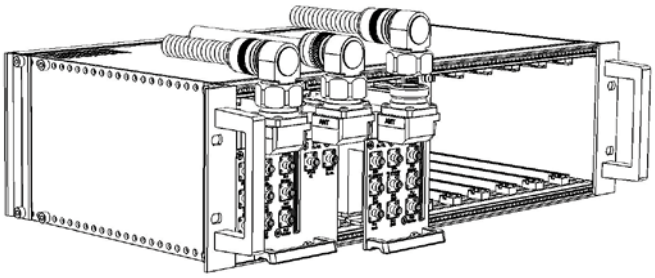

Install each TDTPOI as follows:

1. Insert the module into the slot, but do not insert the module completely, to leave enough space for coaxial cable(s) from/to the Base Station to be routed to the TDTPOI 7/16 RF port(s). See figure above.
2. Provide coaxial cable(s) to be connected to the TDTPOI with a 7/16 90° male connector, then route the cables from the rear of the sub-rack through the space over the sub-rack.
3. Connect the coaxial cable(s) to the 7/16 port(s), but do not tighten the connection yet.
4. Push the module completely into the sub-rack and tighten the captive screws available on the module front panel to fasten the module to the sub-rack.
5. Tighten the 7/16 90° male connector(s) to the TDTPOI 7/16 (f) port(s) using a 7/16-inch torque wrench.

This document contains JMA Wireless proprietary and/or confidential information.

4.2 - Connecting the Master Unit DAS Components

The following sections provide instructions to perform RF, RS485, optical, external alarms, and power supply connections. Instructions to connect the TCPRIPOI to the XRAN Server are also provided.

Warning: It is important that before you start work on any equipment, you read:

- "Safety Rules" on page 120
- Specific precautions and warning statements provided in each procedure
- The following warnings

4.2.1 - Precaution and Warning Statements

- Ethernet or coaxial ports that use a shielded cable must be shielded and grounded at both ends.
- Bare conductors must be coated with antioxidant before crimp connections are made.
- Verify that the intra-building port(s) of the equipment or subassembly are suitable for connection to intra-building or unexposed wiring or cabling only. The intra-building port(s) of the equipment or subassembly ***must not*** have metallic connections to interfaces that connect to the OSP or its wiring. These interfaces are designed for use as intra-building interfaces only (Type 2 or Type 4 ports as described in GR-1089-CORE, Issue 6) and require isolation from the exposed OSP cabling. The addition of primary protectors is insufficient protection for metallic connections between these interfaces and OSP wiring.

This document contains JMA Wireless proprietary and/or confidential information.

4.2.2 - Connecting RF Cables

Caution: The installer should never connect an antenna to the master unit *BTS* port.

Connections among the DAS Master Unit Components

RF connections among the DAS master unit components change according to the application scenario. Refer to the system design and the connection scheme provided with the supply to perform RF connections.

Note: The color of the heat shrink tubing applied to RF and sync cables allows easy identification of the master unit RF connections:

- Black heat shrink tubing identifies DL (downlink) and sync (synchronization) cables.
- White heat shrink tubing identifies UL (uplink) cables.

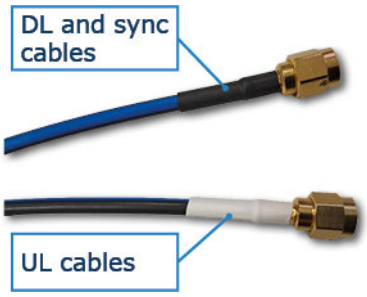

Connections to the Antenna System

Service Front End

Connect the *SERVICE ANT* port on the front of the Service Front End to the service antenna. See "TSFE Front Panel Description" on page 47.

This document contains JMA Wireless proprietary and/or confidential information.

4.2.3 - Connecting RS485 Communication Cables

The DAS supervision module can manage the sub-rack it is equipped in, up to an additional 12 active sub-racks, and an additional power supply unit (SUB-PSUN-MU or SUB-PSUN-MU/48).

The supervision module provides automated identity of the monitored deployed system elements. Each monitored component is assigned an address. Plug-in components inside a sub-rack are identified by their slot number. Refer to the *JMA DAS Platform Remote Monitoring and Management User Guide* for details.

Monitored Components Installed at the Master Unit Site

1. Connect the supervision module RS485 ports, labeled 1 to 8, to the *RS485* ports (RJ45) on the rear panel of the sub-racks to be monitored.

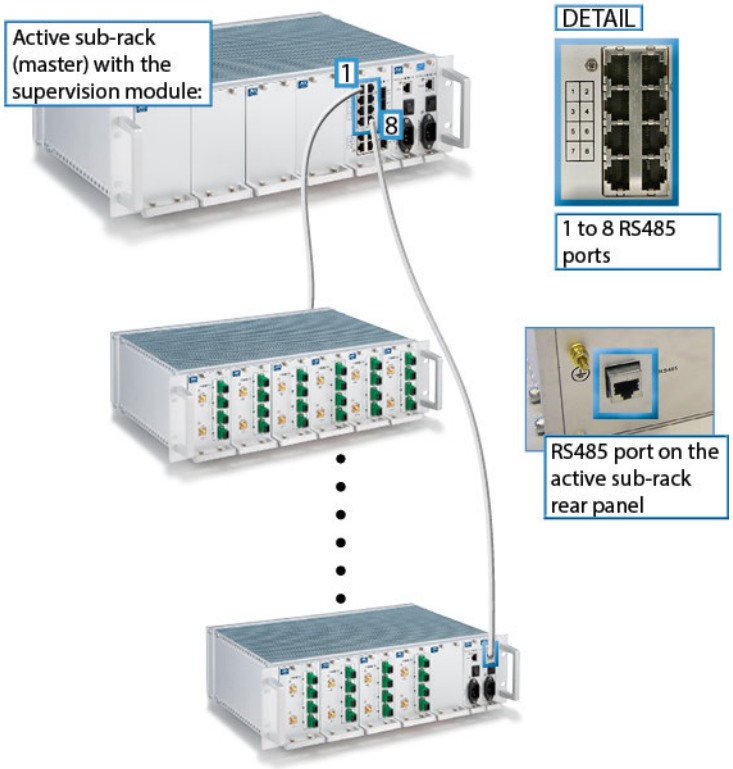

Note: If ports S1 to S4 are not connected to remote Point-to-Point components, they can be used to manage additional sub-racks installed at the master unit site.

2. If ports S1 to S4 are not connected to remote Point-to-Point components, you can connect the *RS485* ports (RJ45) of up to four additional sub-racks installed at the master unit site to the supervision module ports labeled S1 to S4.

Note:

- An additional RS485 port is available on the rear panel of the active sub-rack hosting the supervision module.
  This port is used only when the DAS is equipped with the power supply unit (SUB-PSUN-MU or SUB-PSUN-MU/48) and up to an additional 12 monitored sub-racks, connected to the 12 RS485 front ports.

  Note: The power supply unit, connected to the rear RS485 port, is assigned slot position 12. Therefore, do not insert any module in slot 12 of the sub-rack with the rear RS485 port connected to a SUB-PSUN-MU or SUB-PSUN-MU/48.

This document contains JMA Wireless proprietary and/or confidential information.

- When TPSU plug-in power supply modules are equipped in monitored sub-racks, an RS485 port is also available on the PSU front panel. It makes no difference which RS485 port is connected to the supervision module, either the one on the rear panel of the sub-rack or the one on the front panel of the PSU. When the hot-plug 1+1 redundancy feature is implemented, it makes no difference which power supply module is connected to the supervision module.

- **Point-to-Point Links**

1. Connect the master Point-to-Point modules to ports labeled S1 to S4 to manage remote sub-racks equipped with secondary Point-to-Point modules. The remote sub-racks connected using the optical link to ports S1 to S4 take addresses 9 to 12.

   The DAS Platform supervision module communicates with the secondary Point-to-Point module built-in supervision unit using the single-mode optical fiber connecting master and secondary Point-to-Point modules.

   Note: When remote optical sub-racks are equipped with two or three secondary Point-to-Point modules, the DAS Platform supervision module communicates with the module installed on the left side of the remote sub-rack (slots 1 to 6). The other Point-to-Point secondary modules must be installed in slots 7 to 12.

2. Connect the remote SUB-PSUN-MU or SUB-PSUN-MU/48 to the RS485 port available on the rear panel of the remote sub-rack, hosting Point-to-Point secondary modules.

   Note: The power supply unit, connected to the rear RS485 port of a remote sub-rack, is assigned slot position 12. Therefore, do not insert any module in slot 12 of a remote sub-rack with the rear RS485 port connected to a SUB-PSUN-MU or SUB-PSUN-MU/48.

- **Next Generation Point-to-Point Links**

Note: The next generation secondary Point-to-Point component does not include a built-in supervision unit. It is managed by the supervision module installed at the remote location.

1. Connect the *RS485* port (RJ45) on the rear panel of the master Point-to-Point unit to the supervision module installed at the master unit site.
2. Connect the *RS485* port (RJ45) on the rear panel of the secondary Point-to-Point unit to the supervision module installed at the remote site.

This document contains JMA Wireless proprietary and/or confidential information.

4.2.4 - Connecting Optical Components

When dealing with optical fibers and connectors, it is important that you read the "Safety Rules" on page 120 and observe the following precautions and warning statements:

Caution: Fiber optic devices are sensitive to static electricity.

Warning: When handling fiber optic devices, observe the following precautions:

- Never stare directly into fiber optic connectors and fibers. Invisible emitted laser beams can damage your eyes.
- Always cover optical connectors, adapters, and optical ports with caps to prevent dust from accumulating on the interface. Remove fiber optic protective caps prior to making connections.
- Optical connections must be made with care to avoid damaging the optical fiber or connectors.
- Do not bend fiber optic cable with a tight radius of curvature; the cable might be damaged and losses within the fiber might occur.
- Before mating fiber optic connectors, inspect and clean the connectors and optical ports to ensure optimized performance. Dirty connector interfaces can cause degradation of optical signal. You can inspect connectors using a fiber optic microscope (optical fiber scope) to detect scratches, dirt, dust, and other contaminants on optical connector end faces.

  Before inspection, always turn off the laser source. Never inspect a fiber while looking into it or connecting it to a fiber scope while the laser is on.

  See "Optical Connectors" on page 100 for inspection and cleaning procedures.

4.2.4.1 - Connecting Master Unit Plug-in Optical Modules to Remote Units

Master unit TTR modules and remote units are connected using single mode optical fiber (SMR 9/125) with uplink and downlink optical signals transmitted over the same optical fiber (WDM).

The following procedure is recommended to perform optical connections:

1. Check optical fiber type is SMR 9/125.
2. Just before making optical connections, remove protective caps from each optical connector receptacle.
   Warning: Never stare directly into fiber optic connectors and fibers.
   Note: Remove the transition and the conduit fitting, if mounted on the remote unit optical connector.
3. Inspect and clean jumpers and adaptors that have been left exposed without dust caps. See "Optical Connectors" on page 100 for inspection and cleaning procedures.
   Warning: Never stare directly into fiber optic connectors and fibers.

This document contains JMA Wireless proprietary and/or confidential information.

4. Connect remote units to optical modules.

a TTRU1W-S-M, TTRU2W-S-M, TTRU4W-S-M

Connect the *DL/UL* SC-APC ports on the module front panel to the optical ports on remote units.

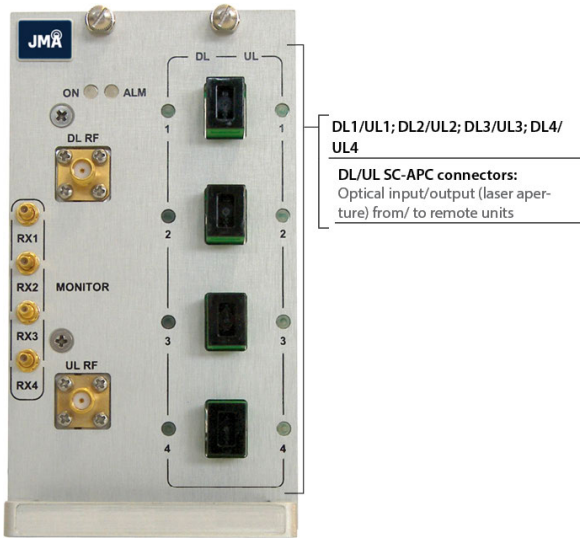

b TTRX24W-S-M

The TTRX24W-S-M provides the optical interface towards up to two MIMO remote units.

Connect the *DL/UL* SC-APC ports on the module front panel to the optical ports on remote units.

Note: The optical ports of each MIMO remote unit must be connected to a different transmitter (A, B).

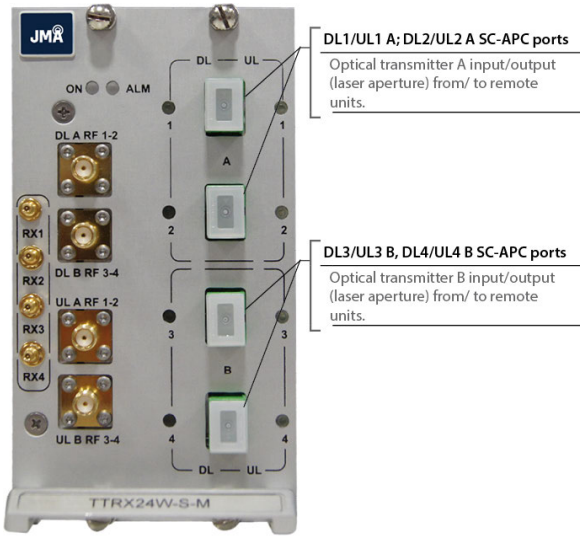

This document contains JMA Wireless proprietary and/or confidential information.

c TTRU2W-S-M-C2

The TTRU2W-S-M-C2 optical module supports up to two locations, with one fiber strand per remote location/per MIMO path.

Connect the *DL/UL 1* optical port to the optical splitter in remote location 1.

Connect the *DL/UL 2* optical port to the optical splitter in remote location 2.

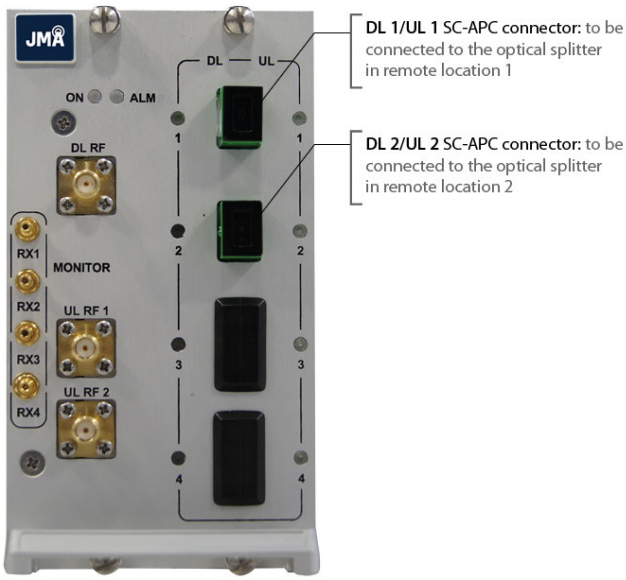

5. Properly seal the remote unit optical connection.

When connecting optical fibers to remote units, a waterproof junction is critical to ensure the IP66 rating provided by the equipment enclosure or by the optional IP66 protection kit.

See *JMA DAS Platform Remote Units Installation Guide* for details.

This document contains JMA Wireless proprietary and/or confidential information.

4.2.4.2 - Connecting the Next Generation Optical Transceiver to the Next Generation Remote Units

Next generation remote units are connected to the next generation optical transceiver with single mode optical fiber (LC-UPC/LC-UPC), with MIMO1 and MIMO2 uplink and downlink optical signals transmitted over the same optical fiber.

Note: SFP+ optical transceivers to be installed into the optical ports of the next generation optical transceiver are delivered with the remote unit to be connected to the next generation transceiver. Optical transceivers installed into the next generation optical transceiver optical ports must have the same color (**black**) on the latch.

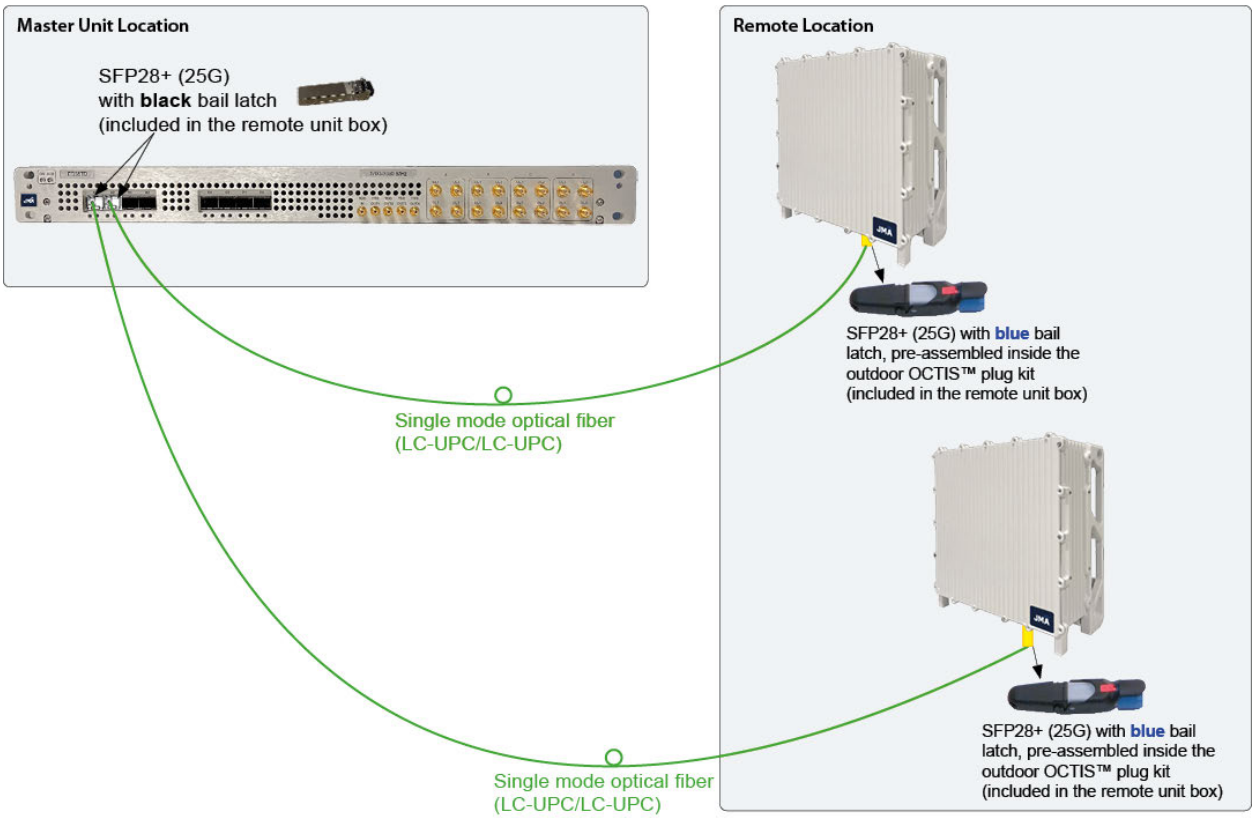

Connect the optical cable from the remote unit to the optical port on next generation optical transceiver as described in the following steps:

1. Install SFP+ transceivers with the **black** bail latch (same TX/RX wavelength) into the optical ports of the next generation optical transceiver.

   Insert one SFP+ optical transceiver (SFP28+, 25G) into each optical port of the next generation optical transceiver to be connected to remote units as follows:

   a Shortly before installation, remove each SFP+ optical transceiver from its box.

   b Correctly align the SFP+ optical transceiver with the optical port.

   c Gently press the SFP+ optical transceiver into the port until it snaps into place.

   d Shortly before making connections, remove the protective cap from each transceiver optical connector receptacle.

This document contains JMA Wireless proprietary and/or confidential information.

2. Connect the single mode optical fiber (LC-UPC/LC-UPC) from each remote unit to the appropriate next generation optical transceiver.

   Note: Make sure you connect the next generation optical transceiver to remote units operating in the same band. The following table details the next generation optical transceivers and remote units operating frequency bands:

Operating Frequency Band	Optical Transceiver Commercial Code	Remote Unit Commercial Codes
3700–3980MHz	ED35TD	RD35TWW2AT, RD35TWX2AT RD35TWW2DT, RD35TWX2DT
3450–3550MHz	ED35BD	RD35BWW2AT, RD35BWX2AT RD35BWW2DT, RD35BWX2DT
3400–3800MHz	ED35ID	RD35IWX2AT, RD35IWX2DT

3. Label optical cables to identify the remote unit connected to each optical port.

Note: The JMA next generation optical transceiver supports eight different simulcast configurations. During commissioning, make sure to select the simulcast configuration consistent with the system design. In the *JMA DAS Platform Local Commissioning User Guide*, refer to *Selecting the NG OTRX Simulcast Configuration* for details about the simulcast configuration selection.

The following table summarizes how RF signal is distributed to the connected remote units by the different cell simulcast configuration options supported by JMA next generation optical transceivers:

RF path mapping: RF signal distribution to connected remote units	Simulcast Configuration to be selected in the DAS supervision web user interface		RF path mapping: RF signal distribution to connected remote units	Simulcast Configuration to be selected in the DAS supervision web user interface
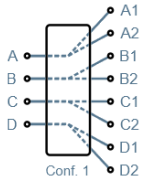	Configuration 1 **Note:** Configuration 1 is the default factory-set configuration.		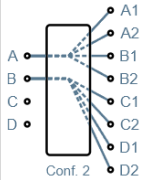	Configuration 2
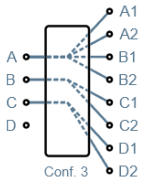	Configuration 3		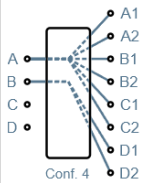	Configuration 4
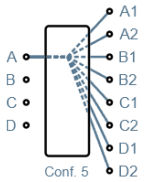	Configuration 5		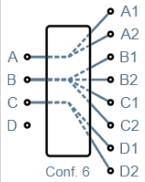	Configuration 6
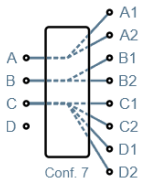	Configuration 7		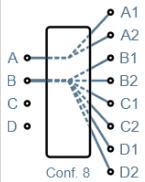	Configuration 8

4.2.4.3 - Connecting Point-to-Point Plug-in Modules

Master and secondary Point-to-Point plug-in modules are connected using single mode optical fiber (SMR 9/125), with uplink and downlink optical signals transmitted over the same optical fiber (WDM).

The following procedure is recommended to perform optical connections:

1. Check optical fiber type is SMR 9/125.
2. Remove protective caps from each optical connector receptacle just before making optical connections.
   Warning: Never stare directly into fiber optic connectors and fibers.
3. Inspect and clean jumpers and adaptors that have been left exposed without dust caps. See "Optical Connectors" on page 100 for inspection and cleaning procedures.
   Warning: Never stare directly into fiber optic connectors and fibers.
4. Connect master and secondary Point-to-Point modules *DL/UL* optical ports.

This document contains JMA Wireless proprietary and/or confidential information.

4.2.4.4 - Connecting Next Generation Point-to-Point Components Using the Optional ED-PTP-KIT

In this application, Master and Secondary Point-to-Point components are connected using single mode optical fiber (LC-UPC/LC-UPC), with MIMO1 and MIMO2 uplink and downlink optical signals transmitted over the same optical fiber.

Note: The optional ED-PTP-KIT is needed for the connection of master and secondary components.

The optional ED-PTP-KIT includes 2 x SFP28+, 25G optical transceivers with different colors of the bail latch.

The following procedure is recommended to connect Master and Secondary Point-to-Point components:

1. Insert the SFP+ with the **black** bail latch into the Master Point-to-Point component optical port.
2. Insert the SFP+ with the **blue** bail latch into the Secondary Point-to-Point component optical port.

   Insert optical transceivers as follows:

   a Shortly before installation, remove each SFP+ optical transceiver from its box.

   b Correctly align the SFP+ optical transceiver with the optical port.

   c Gently press the SFP+ optical transceiver into the port until it snaps into place.

   d Shortly before making connections, remove the protective cap from each transceiver optical connector receptacle.
3. Connect Master and Secondary Point-to-Point components.

   Connect the SFP+ optical transceivers using single mode optical fiber (LC-UPC/LC-UPC).

   Note: Make sure you connect Master and Secondary Point-to-Point components operating in the same band:

   a Connect the master ED35TDM to the secondary ED35TDS.

   b Connect the master ED35BDM to the secondary ED35BDS.

   c Connect the master ED35IDM to the secondary ED35IDS

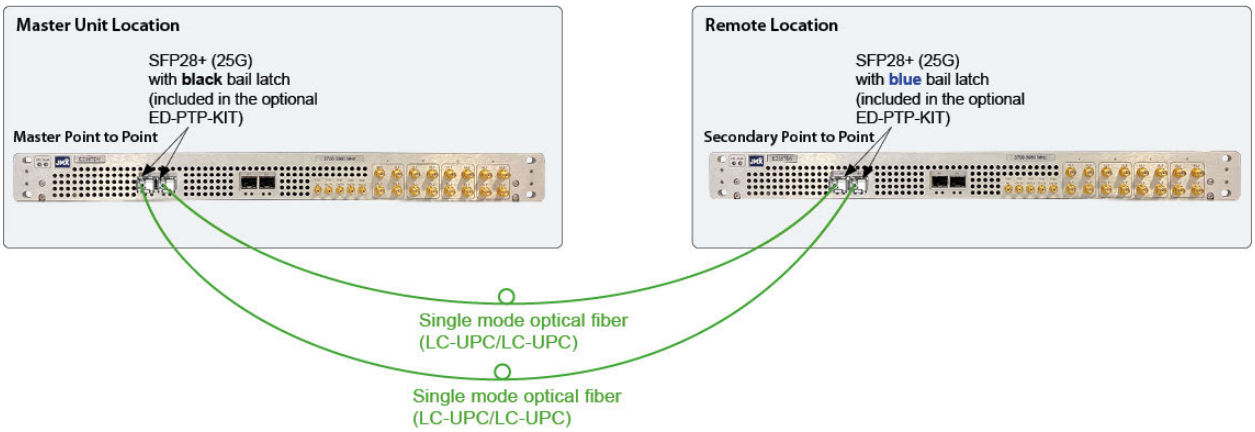

This document contains JMA Wireless proprietary and/or confidential information.

4.2.4.5 - Connecting Next Generation Point-to-Point Components to the JMA TFO-MUX/DEMUX (Dense Wavelength Multiplexers/Demultiplexers) using the Optional DWDM Kits

In this application, Point-to-Point components are connected to the JMA TFO-MUX/DEMUX to allow the transmission of multiple DWDM optical channels simultaneously over a single optical fiber.

Optional DWDM kits are available for this application. Each optional DWDM kit includes 2 x SFP28+ 25G optical transceivers. The color of the bail latch on each optical transceiver identifies the SFP28+ operating DWDM channel.

1. Insert the SFP+ transceivers into the optical ports of the Point-to-Point components.

   Refer to the table below to correctly insert DWDM optical transceivers into the optical ports of the master and secondary Point-to-Point components:

Optional DWDM kit	Color of the bail latch of the SFP28+ Optical Transceiver	SFP28+ Operating DWDM ITU channel	Installation side of the SFP28+ Optical Transceiver	Ports on the Optical Transceiver	MUX/DEMUX Ports to connect
ED-DWDM2325-KIT	Red	23	Master: Master Point-to-Point	TX	DL Ch23 (Master TFO-MUX/DEMUX)
				RX	UL Ch25 (Master TFO-MUX/DEMUX)
	Brown	25	Remote Secondary Point-to-Point	TX	UL Ch25 (Remote TFO-MUX/DEMUX)
				RX	DL Ch23 (Remote TFO-MUX/DEMUX)
ED-DWDM2729-KIT	Grey	27	Master: Master Point-to-Point	TX	DL Ch27 (Master TFO-MUX/DEMUX)
				RX	UL Ch29 (Master TFO-MUX/DEMUX)
	Yellow Green	29	Remote: Secondary Point-to-Point	TX	UL Ch29 (Remote TFO-MUX/DEMUX)
				RX	DL Ch27 (Remote TFO-MUX/DEMUX)
ED-DWDM3133-KIT	Black	31	Master: Master Point-to-Point	TX	DL Ch31 (Master TFO-MUX/DEMUX)
				RX	UL Ch33 (Master TFO-MUX/DEMUX)
	Yellow Orange	33	Remote: Secondary Point-to-Point	TX	UL Ch33 (Remote TFO-MUX/DEMUX)
				RX	DL Ch31 (Remote TFO-MUX/DEMUX)
ED-DWDM3537-KIT	Silver	35	Master: Master Point-to-Point	TX	DL Ch35 (Master TFO-MUX/DEMUX)
				RX	UL Ch37 (Master TFO-MUX/DEMUX)
	Blue	37	Remote: Secondary Point-to-Point	TX	UL Ch37 (Remote TFO-MUX/DEMUX)
				RX	DL Ch35 (Remote TFO-MUX/DEMUX)
ED-DWDM3941-KIT	White	39	Master: Master Point-to-Point	TX	DL Ch39 (Master TFO-MUX/DEMUX)
				RX	UL Ch41 (Master TFO-MUX/DEMUX)
	Sky Blue	41	Remote: Secondary Point-to-Point	TX	UL Ch41 (Remote TFO-MUX/DEMUX)
				RX	DL Ch39 (Remote TFO-MUX/DEMUX)
ED-DWDM4345-KIT	Beige	43	Master: Master Point-to-Point	TX	DL Ch43 (Master TFO-MUX/DEMUX)
				RX	UL Ch45 (Master TFO-MUX/DEMUX)
	Green	45	Remote: Secondary Point-to-Point	TX	UL Ch45 (Remote TFO-MUX/DEMUX)
				RX	DL Ch43 (Remote TFO-MUX/DEMUX)

2. Connect the SFP+ optical transceivers to the TFO-MUX/DEMUX optical ports using single mode optical fiber (LC-UPC/SC-APC).

   Refer to the table above to correctly connect the optical transceivers to the JMA TFO-MUX/DEMUX.

This document contains JMA Wireless proprietary and/or confidential information.

3. Connect the common ports of the master and remote TFO-MUX/DEMUX with single mode optical fiber (SC-APC/ SC-APC).

Note: Make sure you connect Master and Secondary Point-to-Point components operating in the same band.

Example: Connecting ED35TDM and ED35TDS to the JMA TFO-MUX/DEMUX using the Optional ED-DWDM2325-KIT

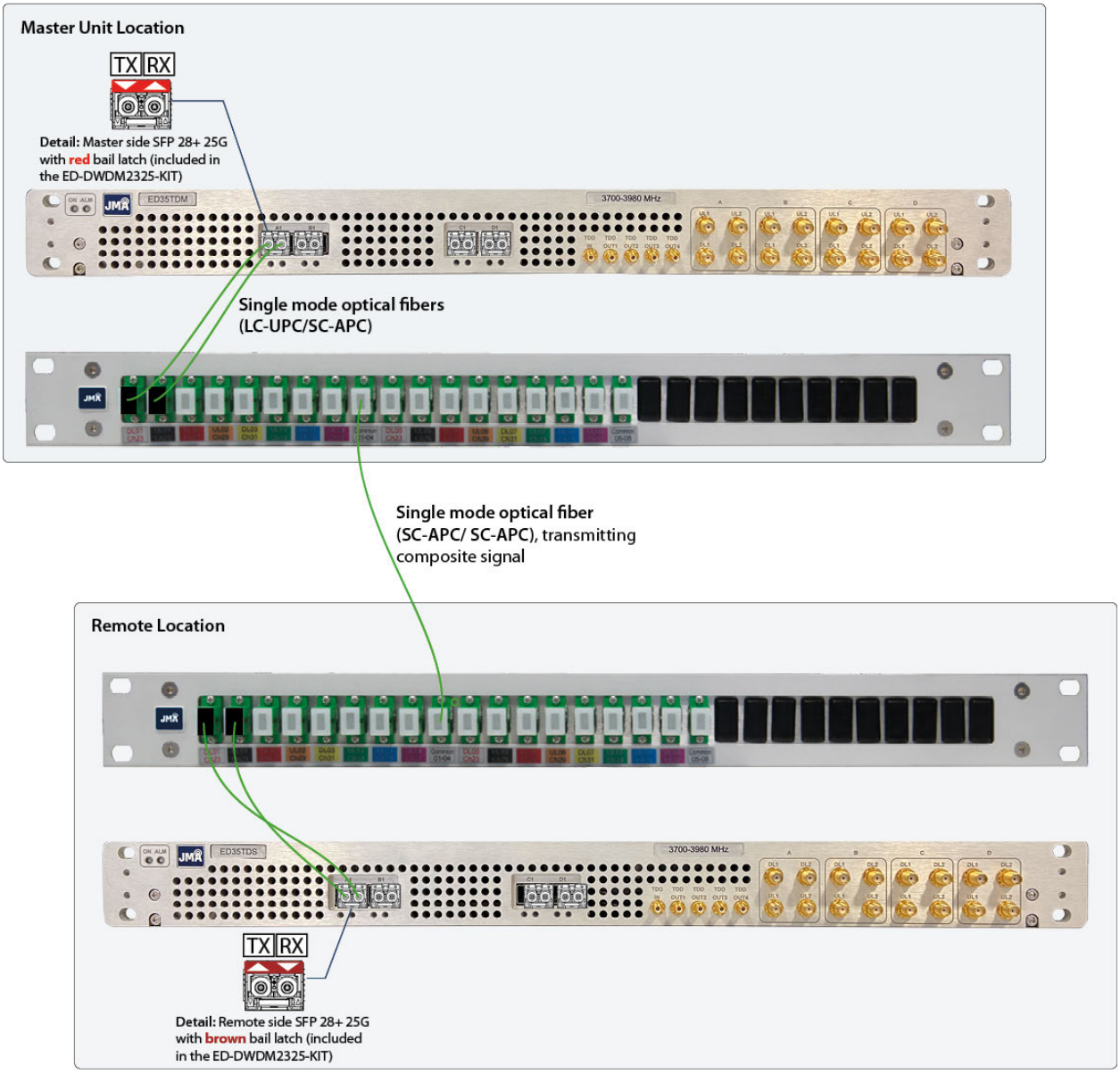

1. Insert the SFP+ with the **red** bail latch into the **ED35TDM** optical port (master side) and the SFP+ with the **brown** bail latch into the **ED35TDS** optical port (remote side).

   Insert optical transceivers as follows:

   a Shortly before installation, remove each SFP+ optical transceiver from its box.

   b Correctly align the SFP+ optical transceiver with the optical port.

   c Gently press the SFP+ optical transceiver into the port until it snaps into place.

This document contains JMA Wireless proprietary and/or confidential information.

d Shortly before making connections, remove the protective cap from each transceiver optical connector receptacle.

2. Connect the SFP+ optical transceivers to the TFO-MUX/DEMUX optical ports using single mode optical fiber (LC-UPC/SC-APC).

Master side:

a Connect the SFP+ **TX** port to the **DL Ch23** port on the TFO-MUX/DEMUX.

b Connect the SFP+ **RX** port to the **UL Ch25** port on the TFO-MUX/DEMUX.

Remote side:

a Connect the SFP+ **TX** port to the **UL Ch25** port on the TFO-MUX/DEMUX.

b Connect the SFP+ **RX** port to the **DL Ch23** port on the TFO-MUX/DEMUX.

3. Connect the common ports of the master and remote TFO-MUX/DEMUX with single mode optical fiber (SC-APC/ SC-APC).

This document contains JMA Wireless proprietary and/or confidential information.

4.2.5 - Connecting the TCPRIPOI Module to the XRAN Server

The CPRI Point of Interface (TCPRIPOI) is the direct interface between the JMA XRAN System and the JMA DAS (Distributed Antenna System). The TCPRIPOI must be connected to the physical CPRI interface of the XRAN server for digital baseband data-flow transfer.

Note: Label CPRI cables consistently to allow easy identification of the TCPRIPOI modules connected to specific ports of the XRAN server.

Caution: Fiber optic devices are sensitive to static electricity.

Warning: When handling fiber optic devices, observe the following precautions:

- Never stare directly into fiber optic connectors and fibers. Invisible emitted laser beams can damage your eyes.
- Always cover optical connectors, adapters, and optical ports with caps to prevent dust from accumulating on the interface. Remove fiber optic protective caps prior to making connections.
- Optical connections must be made with care to avoid damaging the optical fiber or connectors.
- Do not bend fiber optic cable with a tight radius of curvature; the cable might be damaged and losses within the fiber might occur.
- Before mating fiber optic connectors, inspect and clean the connectors and optical ports to ensure optimized performance. Dirty connector interfaces can cause degradation of optical signal. You can inspect connectors using a fiber optic microscope (optical fiber scope) to detect scratches, dirt, dust, and other contaminants on optical connector end faces.

  Before inspection, always turn off the laser source. Never inspect a fiber while looking into it or connecting it to a fiber scope while the laser is on.

1. Insert an SFP+ optical transceiver into each port of the TCPRIPOI to be connected to the server or to a daisy-chained TCPRIPOI, as follows:
   a. Remove each SFP+ optical transceiver from its box shortly before making installation.
   b. Correctly align the SFP+ optical transceiver with the port.
   c. Gently press the SFP+ optical transceiver into the port until it snaps into place.

Note: Use only SFP+ transceivers approved and provided by JMA Wireless. Please contact JMA for a list of approved suppliers and part numbers for use in the target installation.

2. Shortly before making connections, remove the protective cap from each transceiver optical connector receptacle.
3. Connect optical cables.
   - **Single Point-to-Point Topology**

     In configuring the XRAN server, connect the cable from or to the XRAN server to the SFP1 port on the TCPRIPOI front panel.

This document contains JMA Wireless proprietary and/or confidential information.

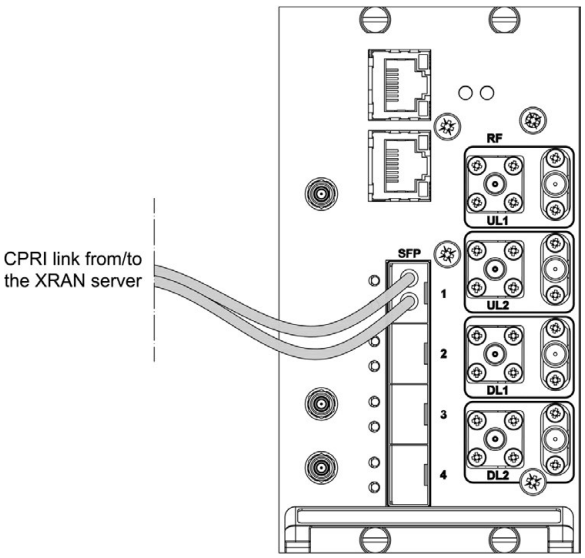

- **Chain topology**

  In configuring the XRAN server, connect:

  - The cable from or to the XRAN server to the SFP1 port on the master TCPRIPOI front panel.
  - The SFP2 and SFP3 ports on the master TCPRIPOI to the SFP1 port on the daisy-chained TCPRIPOI units.
  - The SFP2 and SFP3 ports on each daisy-chained TCPRIPOI to the SFP1 port on lower-level daisy-chained TCPRIPOI units.

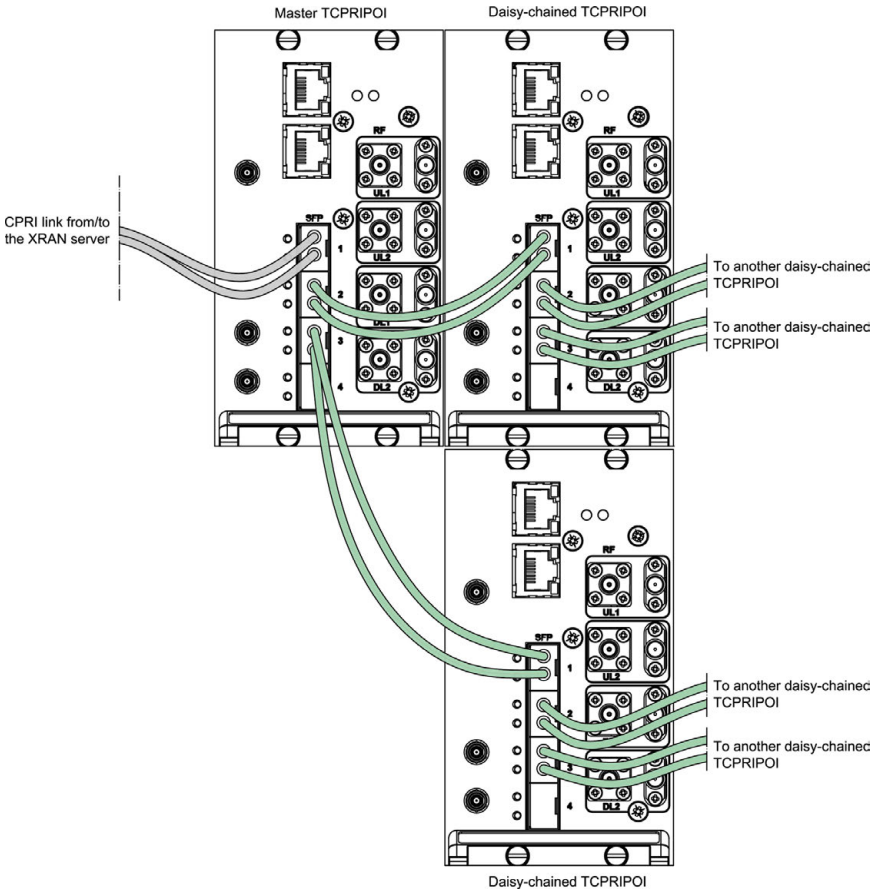

Up to two daisy-chained TCPRIPOI units are supported for each TCPRIPOI.

This document contains JMA Wireless proprietary and/or confidential information.

4.2.6 - Connecting Internal DC Power Supply

This section describes how to connect the DAS components to be powered to the DAS components that provide power supply.

Note:

- You can connect the Next Generation Components (Optical Transceivers, Master and Secondary Point-to- Point rack-mount units) to the DAS components providing power supply or to an external DC power source. To connect the Next Generation components to an external DC power source refer to "Connecting External DC Power Supply" on page 94.
- When SUB-TRX-PSU5N and SUB-TRX-PSU-D sub-racks are equipped with their own plug-in AC or DC power supply modules, no connections are required.

Warning:

- It is important that before you start work on any equipment, you read the "Safety Rules" on page 120.
- Before you start work on any equipment, make sure it is isolated from the power supply source.

1. Ground all active DAS components.

   Protective earthing terminals are located on the back panel of the rack-mount DAS components and can be identified by the following symbol: ⏚. See page 68 for details.

2. Use the provided 28Vdc power supply cords to connect the 28Vdc ports on the rear panel of the DAS components to be powered to the 28Vdc ports on the rear panel of the DAS components that provide power supply (SUB-TRX-PSU5N equipped with plug-in AC or DC power supply modules, SUB-PSUN-MU, or SUB-PSUN-MU/48).

   Refer to the figures below for detailed descriptions of the 28Vdc power supply cords provided with the DAS components.

   - **SUB-TRX-PSU5N**

     The following figure describes the 28Vdc power supply cord provided with each SUB-TRX-PSU5N:

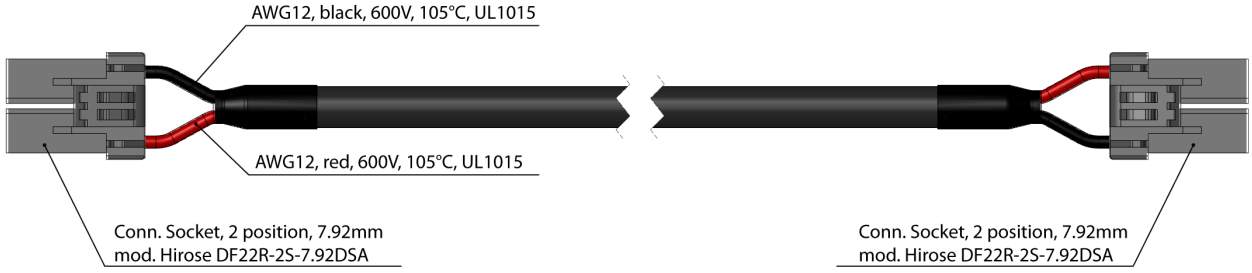

This document contains JMA Wireless proprietary and/or confidential information.

- **SUB-TRX-PSU-D**

  The following figure describes the 28Vdc power supply cord provided with each SUB-TRX-PSU-D:

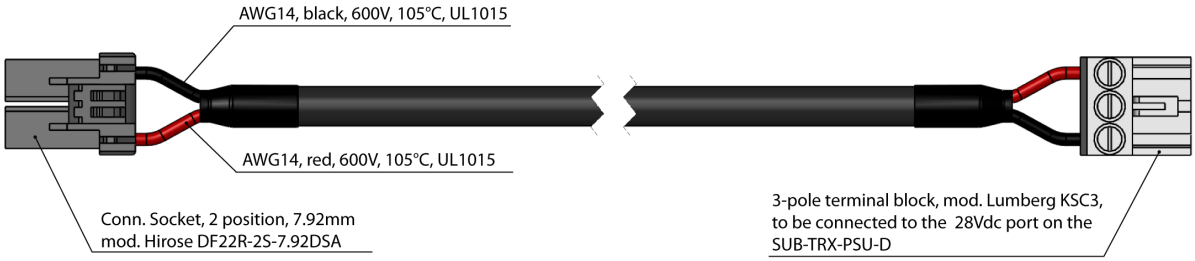

  Note: The following figure shows an additional power supply cord that is provided with each SUB-TRX-PSU-D sub-rack. Use this cord only if power supply connections between two SUB-TRX-PSU-D sub-racks are necessary:

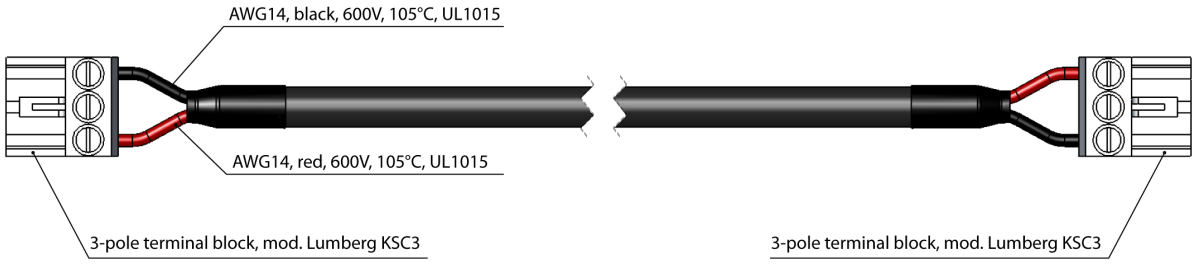

- **TFAN-19-1U-4F-28V and Service Front End (TSFE)**

  The following figure describes the power supply cord that is provided with each TFAN-19-1U-4F-28V and each Service Front End (TSFE):

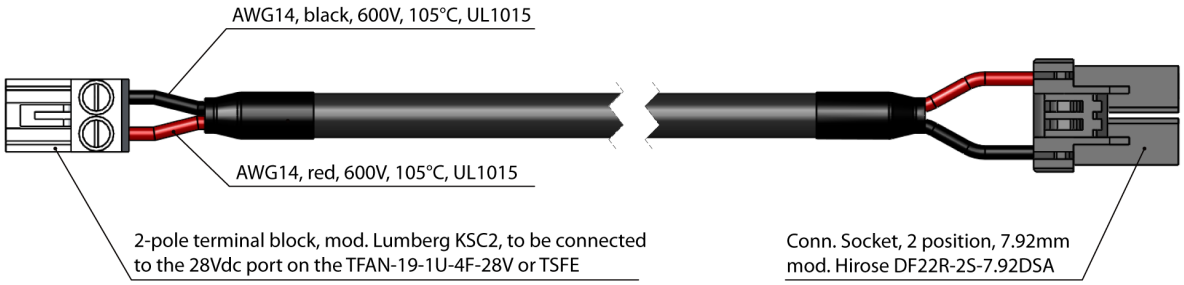

- **Next Generation Optical Transceivers, Master and Secondary Point-to- Point rack-mount units**

  The following figure describes the 28Vdc power supply cord that is provided with each next generation master unit component:

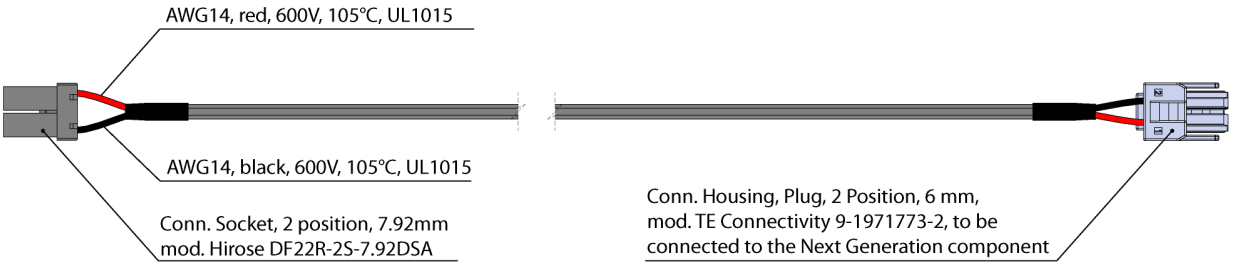

This document contains JMA Wireless proprietary and/or confidential information.

Caution: If the connector is provided with a release tab, to disconnect power cables, first press the connector release tab, then pull the cable out.

This document contains JMA Wireless proprietary and/or confidential information.

4.2.7 - Connecting External AC Power Supply

This section describes how to connect an external, customer-provided AC power source to the following DAS components:

- TPSU/AC plug-in modules.
- TPSU/AC-30-1K modules, equipped in SUB-PSUN-MU sub-racks.
- AC-powered Remote Power Supply Distributor equipped with TRPSU/AC-58-1.2k, AC/DC power supply modules.

It is important that before you start work on any equipment, you read the "Safety Rules" on page 120 and the following precaution and warning statements.

Warning:

- Before you start work on any equipment, make sure it is isolated from the power supply source.
- Make sure that the power supply source provides the nominal voltage prescribed.
- Equipment shall be connected to an earthed socket-outlet. Earthing connection of the socket-outlet requires verification by a skilled person.
- The equipment can be connected to an IT power distribution system.
- The following are the AC power supply cord requirements:
  - If it is necessary to fit an AC power supply plug to a power cable, you must observe the standard wire coloring in the country of installation.

    You must also ensure that the protective earth wire would be the last to break if the cable is subject to excessive strain.
  - The detachable AC power supply cord set shall be no lighter than light PVC sheathed flexible cord (H03VV-F) for indoor installation and rubber (H07RN-F) or PVC (SJTW, for the United States and Canada only) for outdoor installation, according to IEC60227, UL 817 for the United States, and CSA C22.2 No.21 for Canada.
  - The detachable AC power supply cord set shall comply with the following requirements:
    - nominal voltage 240Vac
    - maximum operating temperature ≥ 60°C (140°F)
  - For US/Canada market:
    - Minimum cord length is 1.5m.
    - If used in ITE Rooms, power supply cords must be no longer than 4.5m.
    - Flexible power supply cords must be compatible with Article 400 of the NEC and Tables 11 and 12 of the CEC.
    - Power supply cords for outdoor equipment must be suitable outdoor use type as required by Section 400.4 of the NEC and Rule 4-012 of the CEC, that is, marked water resistant, outdoor, W or W-A.
    - Power supply cords must have attachment plugs rated not less than 125 percent of the rated current of the equipment.

This document contains JMA Wireless proprietary and/or confidential information.

4.2.7.1 - Connecting AC Power to the Master Unit Power Supply Components

Caution: JMA strongly recommends that you install a thermal magnetic circuit breaker upstream of the system. If an upstream circuit breaker is not available at power-up, you must simultaneously switch on all the power supply modules equipped in the master unit.

- **TPSU/AC**

  Warning: Since the plug on the power supply cord is intended to serve as the disconnect device, the socket-outlet shall be installed near the equipment and shall be easily accessible.

  Caution: High touch current. The value of the touch current is 2.2mA for each TPSU/AC module installed in the system.

  Connect AC power to the TPSU/AC as follows:

  1. Verify that each active sub-rack in the system is connected to the nearest ground reference location. See "Connecting Internal DC Power Supply" on page 88.
  2. Make sure that the AC mains switch of each TPSU/AC, equipped in the system, is set to off (0).
  3. Make sure that the power supply source provides the AC voltage prescribed: 100-240Vac nominal (range: 85 to 264Vac).
  4. Connect the AC power supply cord plug to the *AC MAINS* socket, available on the front panel of each TPSU/AC.

     Note: The recommended gauge of the AC power supply cord is AWG 16.

- **TPSU/AC-30-1K (SUB-PSUN-MU)**

  Warning: Since the plug on the power supply cord is intended to serve as the disconnect device, the socket-outlet shall be installed near the equipment and shall be easily accessible.

  Connect AC power to the TPSU/AC-30-1K as follows:

  1. Verify that the switch upstream of the unit is open.
  2. Verify that the SUB-PSUN-MU sub-rack and all active sub-racks in the system are connected to the nearest ground reference location. See "Connecting Internal DC Power Supply" on page 88.
  3. Make sure that the power supply source provides the AC voltage prescribed: 100-240Vac nominal (range: 85 to 264Vac).
  4. Connect the AC power supply cord plug to the AC socket, available on the front panel of each TPSU/AC-30-1K, equipped in the SUB-PSUN-MU power supply unit.

     Note: The recommended gauge of the AC power supply cord is AWG 14.

This document contains JMA Wireless proprietary and/or confidential information.

4.2.7.2 - Connecting AC Power to the Remote Power Supply Distribution System

Warning: Since the plug on the power supply cord is intended to serve as the disconnect device, the socket-outlet shall be installed near the equipment and shall be easily accessible.

Connect the JMA remote power supply distribution system to the AC power supply as follows:

1. Verify that the switch upstream of the unit is open.
2. Verify that the power supply distribution system is connected to the nearest ground reference location. See "Connecting Internal DC Power Supply" on page 88.
3. Make sure that the power supply source provides the AC voltage prescribed (100–120 to 200–277Vac).
4. Connect the AC power supply cord(s) to the AC socket(s), available on the rear panel of SUB-RPSU2-MU/AC or SUB-RPSU-MU/AC power distributor.

   Note: The recommended gauge of the AC power supply cord is AWG 14.

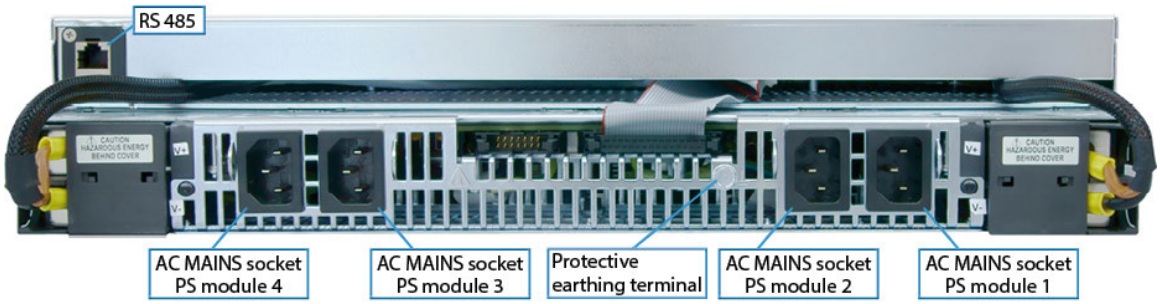

This document contains JMA Wireless proprietary and/or confidential information.

4.2.8 - Connecting External DC Power Supply

This section describes how to connect an external, customer-provided DC power source to the following DAS components:

- TPSU/48 plug-in modules.
- TPSU/48-30-1K modules, equipped in SUB-PSUN-MU/48 sub-racks.
- DC-powered Remote Power Supply Distributor equipped with TRPSU/48-58-2K, DC/DC power supply modules.
- Next Generation Optical Transceivers.
- Next Generation Master and Secondary Point-to- Point rack-mount units.

Note: You can connect the Next Generation Components (Optical Transceivers,Master and Secondary Point-to- Point rack-mount units) to an external DC power source or to the DAS sub-racks providing power supply. To connect the Next Generation components to the DAS components providing power supply refer to "Connecting Internal DC Power Supply" on page 88.

It is important that before you start work on any equipment, you read the "Safety Rules" on page 120 and the following warning statements.

Warning:

- Before you start work on any equipment, make sure it is isolated from the power supply source.
- Make sure that the power supply source provides the nominal voltage prescribed.
- When installing the DC power supplied equipment, you must connect the positive terminal of the DC mains supply to protective earth, Common DC Return (DC-C) configuration.
- According to the manufacturer, the Master Unit DC power supply module shall be installed in an isolated secondary circuit, which is separated from primary circuit by Reinforce or Double insulation.
- The following are the DC power supply cord requirements:
  - The color of the wires inside the power cord should be compliant with the standard wire coloring in the country of installation.
  - The detachable DC power supply cord set must meet the requirements for indoor or outdoor use, in accordance with the standards of the country of installation.
  - The detachable DC power supply cord set shall comply with the following requirements:
    - nominal voltage 72Vdc
    - maximum operating temperature ≥ 75°C (167°F)
  - For US/Canada market:
    - Minimum cord length is 1.5m, with certain constructions (such as external power supplies) allowed to consider both input and output cord lengths into the requirement.
    - Power supply cords must be no longer than 4.5m, if used in ITE Rooms.
    - Flexible power supply cords must be compatible with Article 400 of the NEC and Tables 11 and 12 of the CEC.
    - Power supply cords for outdoor equipment must be suitable outdoor use type as required by Section 400.4 of the NEC and Rule 4-012 of the CEC, that is, marked water

This document contains JMA Wireless proprietary and/or confidential information.

resistant, outdoor, W or W-A.

- Power supply cords must have attachment plugs rated not less than 125 percent of the rated current of the equipment.

4.2.8.1 - Connecting DC Power to the Master Unit Power Supply Components

- **TPSU/48**

  Warning: You must provide an external protective device from overcurrent (10A, 250Vdc). The protective device should be compliant with the standards of the country of installation.

  Connect DC power to the TPSU/48 as follows:

  1. Verify that each active sub-rack in the system is connected to the nearest ground reference location. See "Connecting Internal DC Power Supply" on page 88.
  2. Make sure that the 48Vdc switch of each TPSU/48 equipped in the system is set to off (0).
  3. Make sure that the power supply source provides the DC voltage prescribed: - 48Vdc nominal (range: -72 to -36Vdc).
  4. Connect DC power following the instructions provided in the "Easy Quick DC cabling procedure", delivered with the equipment.
     Three-pole connector PIN assignment:

1	0 Vdc
2	Not Connected
3	– 48Vdc

  Note: The recommended gauge of the DC power supply cord is AWG 18.

- **TPSU/48-30-1K (SUB-PSUN-MU/48)**

  Warning:

  - The Vdc input connector is the means to disconnect the equipment from DC mains supply. Before operation, remove the Vdc input connector to disconnect the equipment from the DC mains power supply.
  - You must provide an external protective device from overcurrent (50A, 250V). The protective device should be compliant with the standards of the country of installation.
  - Regarding resistance of earthing conductors, the manufacturer declares that the equipment is tested with 48A of test current for 1 minute, applied between the protective earthing terminal and accessible conductive parts.
  - The ACTRONIC AR35.40.135 power supply filter, or an equivalent type, shall be installed between the equipment Vdc input and the DC power source to achieve compliance with the conducted emission limits.
  - The FAIR-RITE PRODUCTS CORP. model 0431176451 snap ferrite, or an equivalent type, shall be installed near the equipment Vdc input to achieve compliance with the radiated emission limits.

  Connect DC power to the TPSU/48-30-1K as follows:

This document contains JMA Wireless proprietary and/or confidential information.

1. Verify that the SUB-PSUN-MU/48 sub-rack and all active sub-racks in the system are connected to the nearest ground reference location. See "Connecting Internal DC Power Supply" on page 88.
2. Make sure that the power supply source provides the DC voltage prescribed: - 48Vdc nominal (range: -72 to -36Vdc).
3. Follow the instructions provided in the "Easy Quick DC cabling procedure", provided with the equipment, to connect DC power supply to the Vdc input, available on the front panel of each TPSU/48-30-1K, equipped in the SUB-PSUN-MU/48 power supply unit.

   Note: The recommended gauge of the DC power supply cord is AWG 10.

4.2.8.2 - Connecting DC Power to the Next Generation Optical Transceivers and Master and Secondary Point-to- Point Rack-mount Units

Warning: The equipment is intended and designed to be connected to a DC power source with a maximum transient voltage up to 1.5kV.

Connect DC power to the equipment as follows:

1. **Connect the equipment protective earthing terminal to the nearest ground reference location for electrical safety.**
   The protective earthing terminal is located on the back panel of the sub-rack and can be identified by the ground symbol ⏚.

   Note: The grounding conductor gauge is AWG 14-12, with color compliant with the standard wire coloring in the country of installation.
2. Make sure that the power supply source provides the DC voltage prescribed: -28 to -50Vdc.
3. Connect DC power.

   Note: The gauge of the DC power supply cord is AWG 14.

This document contains JMA Wireless proprietary and/or confidential information.

4.2.8.3 - Connecting DC Power to the Remote Power Supply Distribution System

Warning:

- The Vdc input connector is the means to disconnect the equipment from DC mains supply. Before operation, remove the Vdc Input Connector to disconnect the equipment from the DC mains power supply.
- You must provide an external protective device from overcurrent (50A, 250V). The protective device should be compliant with the standards of the country of installation.
- Regarding resistance of earthing conductors, the manufacturer declares that the equipment is tested with 48A of test current for 1 minute, applied between the protective earthing terminal and accessible conductive parts.

Connect the JMA remote power supply distribution system to the DC power supply as follows:

1. Verify that the power supply distribution system is connected to the nearest ground reference location. See "Connecting Internal DC Power Supply" on page 88.
2. Make sure that the power supply source provides the DC voltage prescribed (-72 to -40Vdc).
3. Follow the instructions provided in the "Easy Quick DC cabling procedure", provided with the equipment to connect DC power supply to the TRPSU/48-58-2K Vdc input(s), available on the rear panel of the SUB-RPSU2-MU/48 or SUB-RPSU-MU/48 power distributor.

   Note: The recommended gauge of the DC power supply cord is AWG 10.

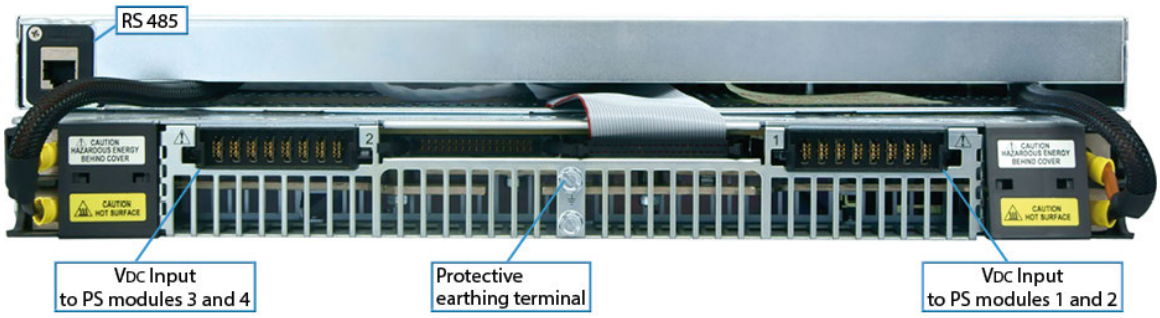

This document contains JMA Wireless proprietary and/or confidential information.

4.2.9 - Connecting External Alarms

There are four external alarm inputs and four dry contact outputs available on the supervision module front panel. The four input lines are opto-isolated and are activated by a short circuit between input pins (max current flow during short = 6mA; max Vdc at input pins = 3.3V).

Refer to the following pin-out when connecting external alarm inputs and outputs to the supervision module EXT OUT and EXT IN connectors:

- **External Alarm Connectors Pin-out**

- EXT IN pin-out

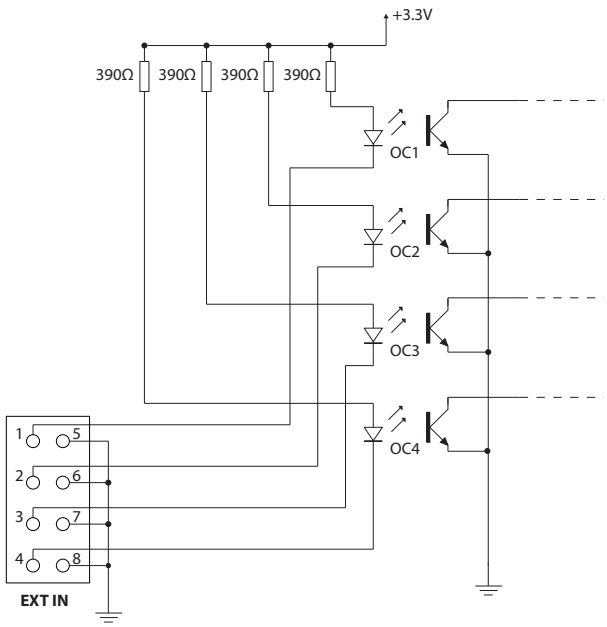

- EXT OUT pin-out

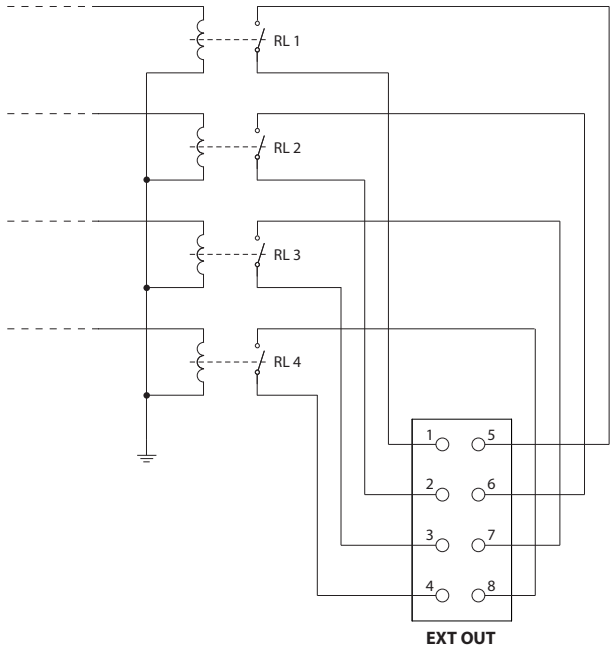

- **External Alarms Wiring**

  The supervision module provides four-pole, female connectors to be plugged into the EXT OUT / EXT IN connectors.

  To connect external alarms:

  1. Plug the female connectors to be wired into the supervision module EXT OUT/EXT IN connectors.
  2. Use a screwdriver to gently slide the small metal locking tab on the side of each contact.
  3. Insert the exposed part of the wire into the contact receptacle.
  4. When the wire is in place, release the tab.

Master Unit: 2x4-pole female connector (to be wired, left; wired, right)

This document contains JMA Wireless proprietary and/or confidential information.

4.3 - Switching on the Master Unit

Caution: To prevent damages to the equipment, before power-up, make sure that the DAS RF interfaces (TDTPOI/ TLPPOI/POI/TAPOI or TDFE) are **not** connected to the signal source.

Switch on the master unit as follows:

- If a thermal magnetic circuit breaker is installed upstream of the System (recommended), set the switches present on the front panels of the power supply modules equipped in the System to the I (ON) position, then close the upstream circuit breaker.
- If an upstream circuit breaker is not available, make sure to **simultaneously** switch on all the power supply modules equipped in the system.

4.4 - Setting Up and Managing the DAS

After power-up, the configuration and management of the DAS is performed connecting to the DAS supervision module web interface.

Refer to the following guides for details:

- *JMA DAS Platform Remote Monitoring and Management User Guide*
- *JMA DAS Platform Local Commissioning User Guide*

This document contains JMA Wireless proprietary and/or confidential information.

4.5 - Performing Preventive Maintenance

Preventive maintenance consists of scheduling routine maintenance of equipment to ensure optimal working conditions, thus preventing problems that might lead to equipment failure.

This section provides the recommended preventive maintenance procedures for the JMA DAS Platform components.

Warning: It is important that before you start work on any equipment, you read:

- "Safety Rules" on page 120
- General precautions and warning statements referenced in each procedure
- Specific precautions and warning statements provided in each procedure

4.5.1 - Optical Fiber

It is a good practice to periodically check the integrity of the optical fiber.

4.5.2 - Optical Connectors

Dirty connector end faces can cause degradation of optical signals. To ensure optimal performance, inspect and clean fiber optic connectors.

Caution: Fiber optic devices are sensitive to static electricity.

Warning: When handling fiber optic devices, observe the following precautions:

- Never stare directly into fiber optic connectors and fibers. Invisible emitted laser beams can damage your eyes.
- Always cover optical connectors, adapters, and optical ports with caps to prevent dust from accumulating on the interface. Remove fiber optic protective caps prior to making connections.
- Optical connections must be made with care to avoid damaging the optical fiber or connectors.
- Do not bend fiber optic cable with a tight radius of curvature; the cable might be damaged and losses within the fiber might occur.
- Before mating fiber optic connectors, inspect and clean the connectors and optical ports to ensure optimized performance. Dirty connector interfaces can cause degradation of optical signal. You can inspect connectors using a fiber optic microscope (optical fiber scope) to detect scratches, dirt, dust, and other contaminants on optical connector end faces.

  Before inspection, always turn off the laser source. Never inspect a fiber while looking into it or connecting it to a fiber scope while the laser is on.

This document contains JMA Wireless proprietary and/or confidential information.

- **Cleaning Methods**

  For fiber optic cleaning, JMA recommends dry-cleaning methods that do not use solvent.

  The following methods are recommended to clean fiber optic ends and optical connector end faces.

  - **Reel cleaner (pigtailed devices)**
    Fiber optic reel cleaner is a reliable dry-cleaning method that ensures uniform results. It is a moderately abrasive fiber optic cleaning method.

    Cleaning procedure:

    Warning: Before cleaning optical fiber, make sure that the laser source is off.

    1. Remove the fiber optic protective cap.
    2. Push and hold the reel cleaner lever to expose the 2-micron fiber cleaning cloth.
    3. Press lightly and rub the connector tip downward.
  - **Stick cleaners**
    Sticks are designed for dry cleaning of fiber optic connector mating sleeves, bulkhead adapters, and receptacles. They are used to clean the end face of connectors already installed in patch panels and hardware devices.

    Cleaning procedure:

    Warning: Before cleaning optical fiber, make sure that the laser source is off.

    Caution: Never reuse a stick.

    1. Insert the stick into the bulkhead adapter or receptacle.
    2. Make the tip contact the connector end face.
    3. Rotate the stick applying a light vertical force.
    4. Pull the stick out and dispose of it.

This document contains JMA Wireless proprietary and/or confidential information.

4.6 - Replacing Faulty Components

The following sections provide instructions for replacing faulty components of the JMA DAS Platform.

Warning: It is important that before you start work on any equipment, you read the "Safety Rules" on page 120, the general warning statements referenced in each procedure, and the specific warnings in each procedure.

4.6.1 - Replacing Faulty Plug-in Modules

1. For modules managed by the DAS supervision module, generate an inventory list to store and restore the module current configuration. See the *JMA DAS Platform Remote Monitoring and Management User Guide* for details.
2. Disconnect all cables (label all cables before disconnection).
3. Loosen the captive screws that fasten the module to the sub-rack and pull the module out.

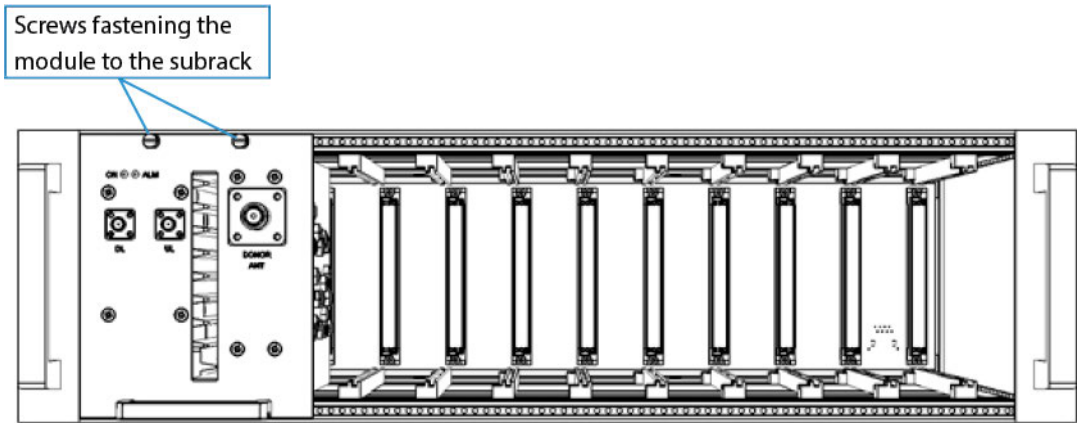

4. Insert the new module, sliding it into position carefully.
5. Tighten the captive screws.
6. Always run a system discovery after replacing optical modules. See the *JMA DAS Platform Remote Monitoring and Management User Guide* for details.

This document contains JMA Wireless proprietary and/or confidential information.

4.6.2 - Replacing the Next Generation Optical Transceiver and Point-to- Point Components Fan Unit

Note: You only have to replace the fan unit if a *Fan Speed* alarm occurs.

Warning:

- It is important that before you start work on any equipment, you read the "Safety Rules" on page 120.
- If the sub-rack is not installed in the rack, place it on a stable surface.
- **Hot surface**

  Do not touch the surface. Contact with the surface may cause burns. Allow the surface to cool before servicing.

Replacement Instructions:

- Tools and equipment:
  - ED-TFAN-KIT, fan replacement kit
  - 3mm hex allen key
- Procedure:

  1. Remove the faulty fan unit from the sub-rack as follows:

     a Loosen the two captive hexagon socket cylindrical head screws M4x18mm that secure the fan unit to the rear of the transceiver. Use a 3mm hex allen key.

     b Carefully pull the faulty fan unit out far enough to disconnect the two cables connecting the unit to the board inside the transceiver.

Caution:

Observe due precautions to prevent electrostatic discharge damage.

Disconnect cables gently to prevent damages to the connectors on the board.

2. Install the new fan kit:
   a. Connect the two cables from the fan unit to the board inside the transceiver.
   b. Position the fan kit, aligning the fan kit and the fixing holes on the rear of the transceiver.

      Note: Make sure the wires are not pinched between the fan kit and the transceiver.
   c. Secure the fan kit to the transceiver tightening the two captive hexagon socket cylindrical head screws M4x18mm, provided with the replacement kit.
3. Access the DAS supervision module web interface and check that the *Fan Speed* alarm is no longer active for the component. Refer to the *JMA DAS Platform Remote Monitoring and Management User Guide* for details.

This document contains JMA Wireless proprietary and/or confidential information.

4.6.3 - Replacing the TDFE Fan Kit

Note: You only have to replace the fan kit if a *Fan Speed* alarm occurs.

Replace the TDFE fan kit as follows:

1. Extract the TDFE from the sub-rack:

- **a** Disconnect all cables (label all cables before disconnection).
- **b** Loosen the captive screws that fasten the module to the sub-rack and pull the module out.

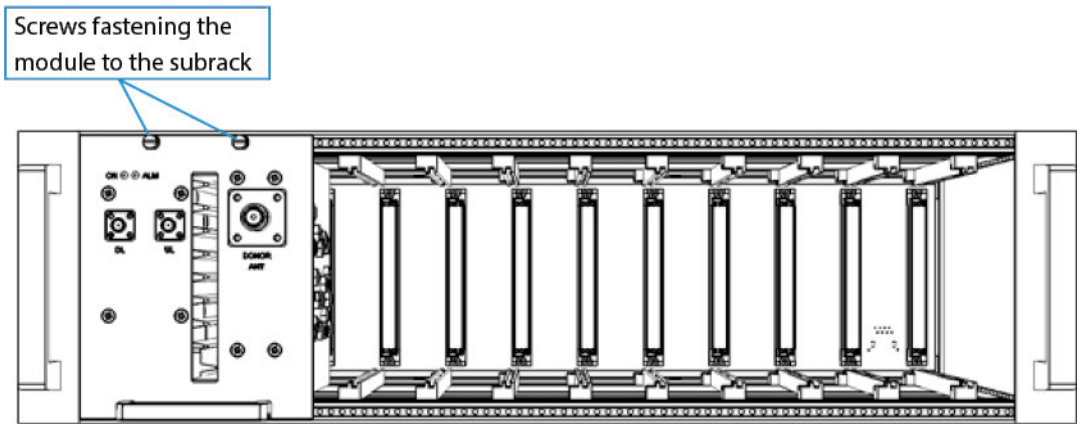

2. Remove the faulty fan kit:

- **a** Place the module on a stable surface.
- **b** Remove the two screws that secure the fan kit to the TDFE heat sink.

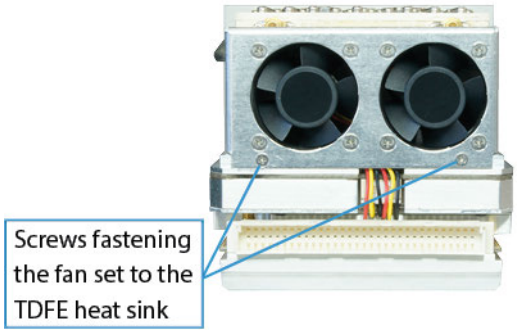

TDFE rear view: screws fastening the fan set to the TDFE heat sink

- **c** Carefully pull the kit forward and downward far enough to disconnect the kit from the TDFE.
- **d** Set the faulty fan kit aside.

3. Install the new fan kit:

- **a** Connect the new fan kit to the module.

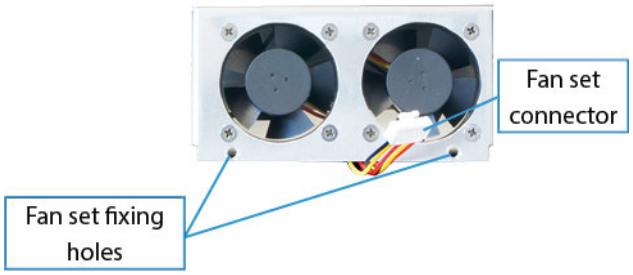

This document contains JMA Wireless proprietary and/or confidential information.

Fan set fixing holes and connector

b Position the fan kit, aligning the fan kit and the TDFE heat sink fixing holes.
Note: Make sure the wires are not pinched between the fans and the heat sink.

c Fix the fans to the TDFE heat sink inserting the screws, provided with the new kit, through the fixing holes. Tighten the screws.

4. Insert the TDFE back into the sub-rack:

a Insert the module, sliding it into position carefully.

b Tighten the module captive screws.

c Access the DAS supervision module web interface and check that the *Fan Speed* alarm is no longer active for the component. Refer to the *JMA DAS Platform Remote Monitoring and Management User Guide* for details.

This document contains JMA Wireless proprietary and/or confidential information.

4.6.4 - Replacing Faulty TPSU/AC-30-1K and TPSU/48-30-1K

This section describes how to replace power supply modules equipped in SUB-PSUN-MU and SUB-PSUN-MU/48 power supply units.

Note: Only power supply modules in hot-swappable redundant configuration can be replaced without switching off the system.

To replace a faulty module:

1. Unplug the power cable that is connected to the faulty module
2. Slide the locking tab on the front panel of the faulty module to the left to unlock the module.
3. Support the bottom of the module with one hand and pull the module out, holding the handle with the other hand.
4. Insert the new module, sliding it into position carefully until it clicks into place.
5. Connect the power cord to the module.

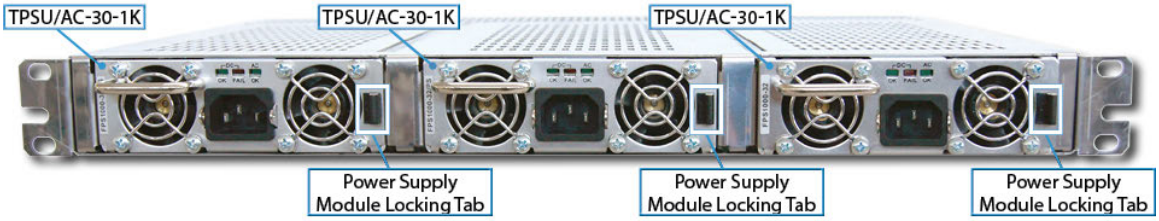

SUB-PSUN-MU front view

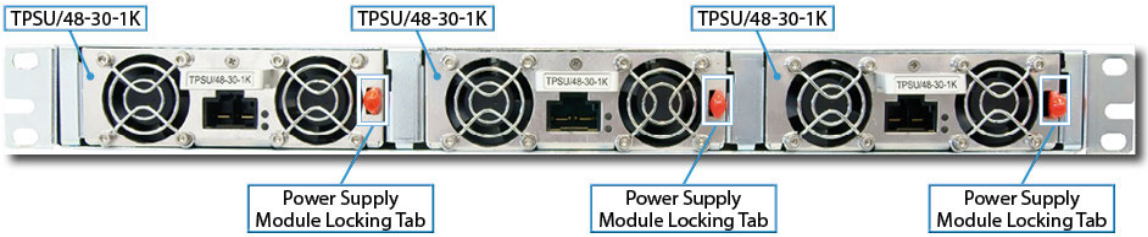

SUB-PSUN-MU/48 front view

4.6.5 - Replacing Faulty TRPSU/AC-58-1.2k and TRPSU/48-58-2k

This section describes how to replace power supply modules equipped in the JMA remote power distributor.

Note: Only power supply modules in hot-swappable redundant configuration can be replaced without switching off the system.

To replace the faulty module, perform the following actions:

1. Remove the faulty module

a Unplug the power cord providing power supply to the faulty module.

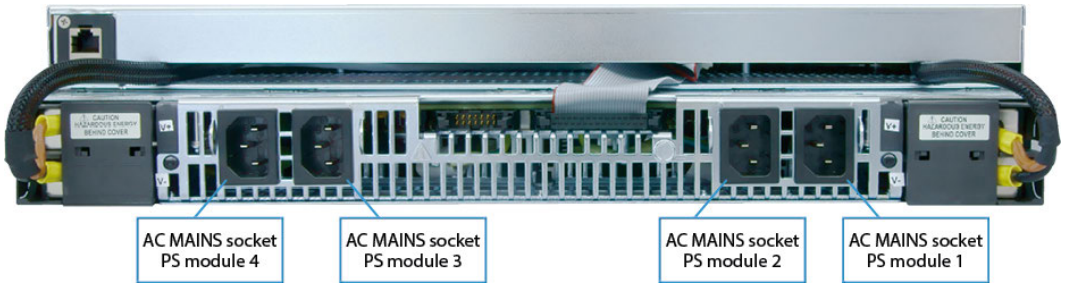

SUB-RPSU2-MU/AC and SUB-RPSU-MU/AC rear view: AC mains sockets

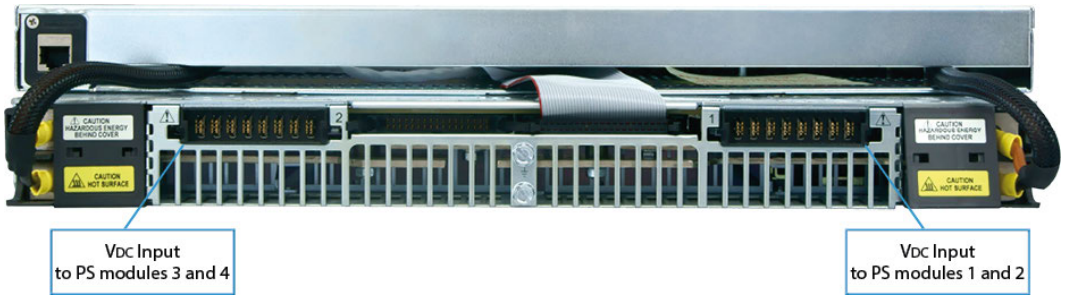

SUB-RPSU2-MU/48 and SUB-RPSU-MU/48 rear view: Vdc inputs

b Release the securing clip at the bottom left corner of the faulty module to unlock the module front panel.

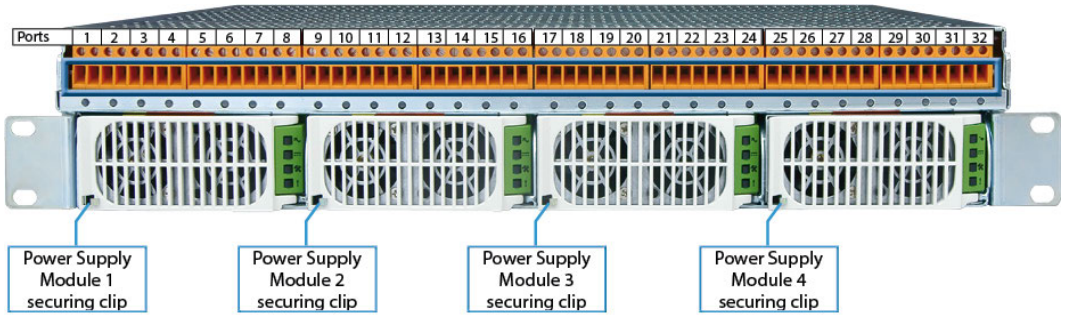

c Open the power supply front panel.

d Pull the module slightly out.

e Support the bottom of the module with one hand, then gently pull the power supply all the way out of the chassis with the other hand.

This document contains JMA Wireless proprietary and/or confidential information.

2. Install the new power supply module:
   a. Release the securing clip at the bottom left corner of the new module to unlock the front panel.
   b. Slowly insert the new module, sliding it into position carefully until it is firmly seated.
   c. Close the power supply front panel until it clicks into place.
   d. Connect the power cord to the module.

This document contains JMA Wireless proprietary and/or confidential information.

5 - Compliance with the Technical Regulatory Standards

5.1 - Compliance with the EU and UK Regulatory Requirements

5.1.1 - EU Directive 2014/53/EU – RED (Radio Equipment Directive) and Radio Equipment Regulations 2017 (S.I. 2017/1206)

The products described in this technical handbook comply with EU directive 2014/53/EU on the harmonization of the laws of the Member States and Radio Equipment Regulations 2017, relating to the making available on the market of radio equipment, when properly installed, maintained, and used for their intended purpose: improving coverage of mobile communication networks.

A signed copy of the Declaration Of Conformity is available upon request.

For further information, contact the JMA After Sales department at www.jmawireless.com

Teko Telecom S.r.l. a socio unico
Via Meucci 24/a
40024 Castel San Pietro Terme (Bologna) – Italy

Radio equipment operating frequency bands

Operating bands (TDFE+TSFE)	Downlink (DL) and Uplink (UL) Operating Frequencies (MHz)
LTE 800	791-821 (DL); 832-862 (UL)
EGSM	925-960 (DL); 880-915 (UL)
RGSM	921-960 (DL); 876-915 (UL)
DCS	1805-1880 (DL); 1710-1785 (UL)
UMTS	2110-2170 (DL); 1920-1980 (UL)
LTE2600	2620-2690 (DL); 2500-2570 (UL)

Maximum radio-frequency power transmitted in the frequency bands

Modular Repeaters (TDFE+TSFE)							
Operating band		LTE 800	EGSM	RGSM	DCS	UMTS	LTE2600
Maximum downlink output power (dBm)	High Power	40	40	40	40	40	40
	Very High Power	43	43	43	43	43	43
Maximum downlink gain (dB)	High Power	90	90	90	90	90	90
	Very High Power	93	93	93	93	93	93
Maximum uplink output power (dBm)	High Power	26	23	23	25	27	26
	Very High Power	26	23	23	25	27	26
Maximum uplink gain (dB)	High Power	90	90	90	90	90	90
	Very High Power	93	93	93	93	93	93

This document contains JMA Wireless proprietary and/or confidential information.

5.1.1.1 - Note Relevant to Product Utilization within the European Union (EU)

Equipment is only for professional use; only adequately trained personnel can operate the equipment. Installation and commissioning must be authorized and carried out by the Mobile Network Operator (MNO) or its authorized representative. The use of the equipment must be in accordance with the MNO.

Depending on the country of utilization, the installation and use of the equipment described in this manual may be subject to restrictions. Users are responsible for verifying compliance with the national provisions or authorization required.

For further information refer to: http://www.efis.dk/

	AT	BE	BG	CH	CY	CZ	DE
	DK	EE	EL	ES	FI	FR	HR
	HU	IE	IT	IS	LI	LT	LU
	LV	MT	NL	NO	PL	PT	RO
	SE	SI	SK	TR	UK(NI)		

5.1.1.2 - Compliance with the Maximum Permissible Exposure (MPE) Limits (EN 50385)

Examples of minimum separation distance calculation, based on the EN 50385

The following table summarizes the results of the calculations carried out assuming:

- Zero losses between the output connector of JMA equipment and the input connector of the antenna
- Maximum gain estimated for outdoor Antenna Gi = 19dBi (for each band)
- Maximum gain estimated for indoor Antenna Gi = 7dBi (for each band)
- No co-location or operation in conjunction with any other antenna or transmitter.

Note: The following table is **not** meant to represent the actual compliance distance from a particular JMA Modular Repeater, being antennas, cables, and other RF components not provided with JMA equipment. The actual compliance distance from a particular equipment can be calculated in the final installation phase only - when antenna, cables and other RF components specifications are available.

Equipment	Type	Maximum Output Power (dBm)	Minimum separation distance between a person and the antenna in order to comply with MPE limits [m]			
			Indoor installation		Outdoor installation	
			E=6 [V/m]	E=20 [V/m]	E=6 [V/m]	E=20 [V/m]
Service Front End (TSFE)	High-power Service Front End (LTE800 or EGSM or DCS or UMTS or LTE2600)	40	6.3	20	25.1	8.0
	Very-high-power Service Front End (LTE800 or EGSM or DCS or UMTS)	43	8.9	2.8	35.6	11.2
Donor Front End (TDFE)	Single-band EGSM Donor Front End	23	0.9	0.3	3.6	1.1
	Single-band DCS Donor Front End	25	1.1	0.4	4.5	1.4
	Single-band LTE 800 or LTE2600 Donor Front End	26	1.3	0.4	5.0	1.6
	Single-band UMTS Donor Front End	27	1.4	0.5	5.6	1.8

This document contains JMA Wireless proprietary and/or confidential information.

5.1.2 - EU Directive 2015/863/EU – RoHS (Restriction of the Use of certain Hazardous Substances)

This product complies with EU Directive 2015/863/EU on Restriction of the use of certain Hazardous Substances in electrical and electronic equipment (also known as “RoHS 3”). The product does not contain the substances listed in the Directive in concentrations higher than the maximum admitted values.

The Environmental Friendly Use Period (EFUP) for all enclosed products and their parts are per the symbol shown here, unless otherwise marked. Certain parts may have a different EFUP (for example, battery modules) and so are marked to reflect such. The Environmental Friendly Use Period is valid only when the product is operated under the conditions defined in the product manual.

5.1.3 - EU Directive 2012/19/EU – WEEE (Waste Electrical and Electronic Equipment)

This product complies with the EU directive 2012/19/EU – WEEE (Waste Electrical and Electronic Equipment)

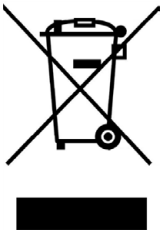

The symbol of the crossed container marked on the equipment shows that the product, at the end of its useful life, must be collected separately from other refuse. Therefore the user must deliver the equipment that has reached the end of its life to the special differentiated electronic and electrotechnical refuse collection centers for subsequent dispatch of the discarded equipment for recycling, treatment, and environmentally compatible disposal, thus contributing in preventing possible negative effects on the environment and on health and favoring the recycling of the materials from which the equipment is made.

Illicit disposal of the product by the user will lead to the application of the penalties provided for by the national legislations of the various Member States on receipt of directive 2012/19/EU.

For further information, contact the JMA After Sales department: www.jmawireless.com

5.1.4 - Packaging and Packaging Waste Directive 94/62/EC and Subsequent Amendments

The packaging of the product complies with the Directive 94/62/EC and subsequent amendments, concerning packaging and packaging waste. Environmentally harmful materials are not used for packaging.

Packaging is made from materials that can easily be recycled after use. Depending on the means of transportation, the equipment is packed in a cardboard or wooden box, protected with expanded polystyrene or barrier bags.

The packaging materials are marked according to ISO 11 469.

Do not throw packaging materials into unsorted waste. Instead, separate them according to local regulations of waste disposal options.

This document contains JMA Wireless proprietary and/or confidential information.

5.2 - Compliance with FCC Rules and Regulations

All JMA equipment complies with the applicable rules described in Title 47 CFR (Code of Federal Regulations), Part 15.

For further information regarding Supplier's Declaration of Conformity, please contact the representative of responsible party:

Yatin Buch, ybuch@jmawireless.com, Liverpool, New York 13088 USA, Mobile: +1 315-382-3341

This device complies with part 15 of the FCC Rules. Operation is subject to the following two conditions: (1) This device may not cause harmful interference, and (2) this device must accept any interference received, including interference that may cause undesired operation.

This equipment has been tested and found to comply with the limits for a Class B digital device, pursuant to part 15 of the FCC Rules. These limits are designed to provide reasonable protection against harmful interference in a residential installation. This equipment generates, uses and can radiate radio frequency energy and, if not installed and used in accordance with the instructions, may cause harmful interference to radio communications. However, there is no guarantee that interference will not occur in a particular installation. If this equipment does cause harmful interference to radio or television reception, which can be determined by turning the equipment off and on, the user is encouraged to try to correct the interference by one or more of the following measures:

- Reorient or relocate the receiving antenna.
- Increase the separation between the equipment and receiver.
- Connect the equipment into an outlet on a circuit different from that to which the receiver is connected.
- Consult the dealer or an experienced radio/TV technician for help.

Changes or modifications not expressly approved by the party responsible for compliance could void the user's authority to operate the equipment.

The antenna(s) used for this transmitter must be installed to provide a separation distance from all persons as follows, assuming no co-location or operating in conjunction with any other antenna or transmitter:

- at least 50cm for Donor Front End family (with 12.71dB of maximum antenna gain for operating bands lower than 1.5GHz and 19dB for operating bands higher than 1.5GHz).
- at least 150cm for very-high-power amplifier radio module, equipped inside Service Front End family (with 7.7dB of maximum antenna gain for operating bands lower than 1.5GHz and 11.5dB for operating bands higher than 1.5GHz).
- at least 200cm for very-high-power amplifier radio module in MIMO application, equipped inside Service Front End family (with 7.2dB of maximum antenna gain for operating bands lower than 1.5GHz and 11dB for operating bands higher than 1.5GHz).
- at least 150cm for very-very-high-power amplifier radio module, equipped inside Service Front End family (with 5.4dB of maximum antenna gain for operating bands lower than 1.5GHz and 8.5dB for operating bands higher than 1.5GHz).

This document contains JMA Wireless proprietary and/or confidential information.

- at least 200cm for very-very-high-power amplifier radio module in MIMO application, equipped inside Service Front End family (with 4.9dB of maximum antenna gain for operating bands lower than 1.5GHz and 8dB for operating bands higher than 1.5GHz).

Specifications of antennas, cables, RF components, and similar equipment will be provided only in the final installation phase, being the external antenna not provided with equipment.

5.2.1 - Radio Equipment Operating Frequency Bands: Commercial Bands

Operating bands (TDFE+TSFE)	Downlink (DL) and Uplink (UL) Operating Frequencies (MHz)
SMR700 Low	728–746 (DL); 698–716 (UL)
SMR700 High	746–758 (DL); 776–788 (UL)
AMPS	869–894 (DL); 824–849 (UL)
PCS	1930–1995 (DL); 1850–1915 (UL)
AWS	2110–2155 (DL); 1710–1755 (UL)

Warning for Commercial Bands

WARNING. This is NOT a CONSUMER device.
It is designed for installation by FCC LICENSEES and QUALIFIED INSTALLERS.
You MUST have an FCC LICENSE or express consent of an FCC Licensee to operate this device.
Unauthorized use may result in significant forfeiture penalties, including penalties in excess of $100,000 for each continuing violation.

Note: Fixed stations operating in the 1710-1755MHz band are limited to 1W EIRP and to a maximum antenna height of 10meters above ground.

This document contains JMA Wireless proprietary and/or confidential information.

5.3 - Industry Canada Compliance

Industry Canada Industrie Canada

- **Industry Canada**

The Radio Standards Specification 102 (RSS-102) sets out the requirements and measurement techniques used to evaluate RF exposure compliance of radiocommunication apparatus designed to be used within the vicinity of the human body.

It is the responsibility of proponents and operators of antenna system installations to ensure that all radiocommunication and broadcasting installations comply at all times with Health Canada's Safety Code 6.

The antenna(s) used for this transmitter must be installed to provide a separation distance from all persons as follows, assuming no co-location or operating in conjunction with any other antenna or transmitter:

- at least 50cm for Donor Front End family (with 15.5dB of maximum antenna gain for operating bands lower than 1.5GHz and 19dB for operating bands higher than 1.5GHz).
- at least 150cm for Very High Power Amplifier radio module, equipped inside Service Front End family (with 8dB of maximum antenna gain for operating bands lower than 1.5GHz and 11.5dB for operating bands higher than 1.5GHz).

Specifications of antennas, cables, RF components, and similar equipment will be provided only in the final installation phase, being the external antenna not provided with equipment.

Equipment will be accessible only to maintenance technicians, who are required to switch it off before performing any maintenance operation.

This document contains JMA Wireless proprietary and/or confidential information.

- **Industrie Canada**

La spécification sur les normes radioélectriques 102 (RSS-102) énonce les exigences et les techniques de mesure utilisées pour évaluer la conformité de l'exposition aux radiofréquences des appareils de radiocommunication conçus pour être utilisés à proximité du corps humain.

Il incombe aux promoteurs et exploitants d'installations de systèmes d'antennes de s'assurer que toutes les installations de radiocommunication et de radiodiffusion respectent tout le temps au code de sécurité 6 de santé du Canada.

La/les antenne (s) utilisée(s) pour ce transmetteur doit être installé afin de fournir une distance de séparation de:

- *Au moins 50cm pour la famille de Front End Donateur (avec 15,5dB de gain maximal d'antenne pour les bandes inférieures à 1,5GHz et 19dB pour les bandes supérieures à 1,5GHz).*
- *Au moins 150cm pour le module amplificateur radio à très haute puissance, équipé à l'intérieur de la famille de Front End de Service (avec 8dB of gain maximal pour les bandes inférieures à 1,5GHz et 11,5dB pour les bandes supérieures à 1,5GHz)*

de toutes les personnes en supposant l'absence de colocalisation ou d'exploitation en conjonction avec une autre antenne ou émetteur.

Spécifications des antennes, câbles, composants à radiofréquence, etc. ne seront fournis que dans la phase finale de l'installation, étant que l'antenne externe n'est pas fourni avec l'équipement.

L'équipement sera accessible seulement aux hommes d'entretien, qui doit l'éteindre avant toutes les opérations de maintenance.

This document contains JMA Wireless proprietary and/or confidential information.

Frequency Band *Bande de fréquence*	Nominal Passband Gain *Gain dans la bande passante nominale*	Nominal Bandwidth *Largeur de bande nominale*	Rated mean output power (single carrier) *Puissance de sortie moyenne nominale (porteuse unique)*	Input and output impedances *Impédances d'entrée et de sortie*
Very High Power Amplifier Radio Module				
728-746MHz	48dB	18MHz	43dBm (20W)	50Ω
746-756MHz	48dB	10MHz	43dBm (20W)	50Ω
851-869MHz	48dB	18MHz	43dBm (20W)	50Ω
869-894MHz	48dB	25MHz	43dBm (20W)	50Ω
1930-1995MHz	48dB	65MHz	43dBm (20W)	50Ω
2110-2155MHz	48dB	45MHz	43dBm (20W)	50Ω
2620-2690MHz	48dB	70MHz	43dBm (20W)	50Ω
Digital Front End				
698-716MHz	64dB	18MHz	26dBm (0.4W)	50Ω
777-787MHz	64dB	10MHz	26dBm (0.4W)	50Ω
806-824MHz	64dB	18MHz	26dBm (0.4W)	50Ω
824-849MHz	64dB	25MHz	26dBm (0.4W)	50Ω
1850-1915MHz	64dB	65MHz	26dBm (0.4W)	50Ω
1710-1755MHz	64dB	45MHz	26dBm (0.4W)	50Ω
2500-2570MHz	64dB	70MHz	26dBm (0.4W)	50Ω
798-806MHz	64dB	8MHz	26dBm (0.4W)	50Ω
Six-band Enhanced Power Remote Unit				
728-746MHz	36dB	18MHz	31dBm (1.25W)	50Ω
746-756MHz	36dB	10MHz	31dBm (1.25W)	50Ω
851-869MHz	36dB	18MHz	31dBm (1.25W)	50Ω
869-894MHz	36dB	25MHz	31dBm (1.25W)	50Ω
1930-1995MHz	36dB	65MHz	31dBm (1.25W)	50Ω
2110-2155MHz	36dB	45MHz	31dBm (1.25W)	50Ω
2110-2180MHz	36dB	70MHz	31dBm (1.25W)	50Ω
2350-2360MHz	36dB	10MHz	31dBm (1.25W)	50Ω
2620-2690MHz	36dB	70MHz	31dBm (1.25W)	50Ω
Dual-band Public Safety Enhanced Power Remote Unit				
768-776MHz	36dB	8MHz	31dBm (1.25W)	50Ω
851-869MHz	36dB	18MHz	31dBm (1.25W)	50Ω

Warning: This is not a consumer device. It is designed for installation by an installer approved by an ISED licensee. You **must** have an **ISED licence** or the express consent of an ISED licensee to operate this device.

Avertissement: *Ce produit n'est pas un appareil de consommation. Il est conçu pour être installé par un installateur approuvé par un titulaire de licence d'ISDE. Pour utiliser cet appareil, vous DEVEZ détenir une LICENCE d'ISDE ou avoir obtenu le consentement exprès d'un titulaire de licence autorisé par ISDE.*

WARNING. This is NOT a CONSUMER device. It is designed for installation by an installer approved by an ISED licensee. You MUST have an ISED LICENCE or the express consent of an ISED licensee to operate this device.
AVERTISSEMENT: Ce produit N'EST PAS un appareil de CONSOMMATION. Il est conçu pour être installé par un installateur approuvé par un titulaire de licence d'ISDE. Pour utiliser cet appareil, vous DEVEZ détenir une LICENCE d'ISDE ou avoir obtenu le consentement exprès d'un titulaire de licence autorisé par ISDE.

This document contains JMA Wireless proprietary and/or confidential information.

6 - Attachments

6.1 - Getting Help: Technical Support Contact Information

- JMA International
  +1 315 431-7100
  +1 888-201-6073
  customerservice@jmawireless.com
- JMA United States
  Toll Free +1 888-201-6073, Outside US +1 315-431-7100
  techsupport@jmawireless.com
- JMA Italy - BTC
  +39 051 6946811
  VAS-techsupport@jmawireless.com

This document contains JMA Wireless proprietary and/or confidential information.

6.2 - Technical Specifications

The following tables provide the electrical, environmental, and mechanical specifications for the JMA DAS Platform components.

Refer to the JMA datasheets for detailed specifications. Contact JMA Sales Office for further information.

Sub-racks and Rack-mount Components

Commercial Code and Description	Dimensions	Operating temperature range	Non-condensing Relative Humidity
SUB-TRX-PSU5N- Standard Active Sub-rack	19” - 3U, depth 270mm (10.63in)	-5°C to +55°C (+23°F to +131°F) with proper forced-air cooling	5%-85% Short period limit (max 96 hours): 5%-93%
SUB-HPOI - Standard Passive Sub-rack	19” - 3U, depth 270mm (10.63in)	-5°C to +55°C (+23°F to +131°F)	
SUB-TRX-PSU-D - Deep Active Sub-rack	19” - 3U, depth 360mm (14.17in)		
TSFE - Service Front End	19” - 2U, depth 360mm (14.17 in)		
ED35TD, ED35BD, ED35ID - Next Generation Optical Transceivers	19” - 1U, depth 330mm (13in)		
ED35TDM, ED35BDM, ED35IDM - Next Generation Master Point-to-Point Components	19” - 1U, depth 330mm (13in)		
ED35TDS, ED35BDS, ED35IDS - Next Generation Secondary Point-to-Point Components	19” - 1U, depth 330mm (13in)		
TFAN-19-1U-4F-28V - Forced-Air Cooling Unit	19” - 1U, depth 270mm (10.63in)		

Power Supply Components

Commercial Code and Description	Dimensions	Operating temperature range	Non-condensing Relative Humidity	Output Power
TPSU/AC - AC/DC Power Supply Unit **TPSU/48** - DC/DC Power Supply Unit	3U - 7TE	-5°C to +55°C (+23°F to +131°F) with proper forced-air cooling	5%-85% Short period limit (max 96 hours): 5%-93%	100W each, up to 2 in parallel 90W each, 3-4 in parallel 80W each, more than 4 in parallel
SUB-PSUN-MU Power supply sub-rack, with one to three AC/DC power supply modules (TPSU/AC-30-1K)	19” - 1U depth 376mm (14.8in) handles included	0°C up to +70°C (+32°F to +158°F) 50 to 60°C, derate 2% /°C 60 to 70°C, derate 2.5%/°C	5%-85% Short period limit (max 96 hours): 5%-93%	900W, each TPSU/AC-30-1K 2430W, max configuration: 3x TPSU/AC-30-1K
SUB-PSUN-MU/48 Power supply sub-rack, with one to three DC/DC power supply modules (TPSU/48-30-1K)	19” - 1U depth 376mm (14.8in) handles included	-5°C up to +55°C (+23°F to +131°F)	5%-85% Short period limit (max 96 hours): 5%-93%	950W each DC/DC module (TPSU/48-30-1K) 2850W, max configuration (3x TPSU/48-30-1K)
SUB-RPSU2-MU/AC, SUB-RPSU-MU/AC Power supply distribution system, with one to four AC/DC power supply modules (TRPSU/AC-58-1.2k)	19” - 2U depth 421.5mm (16.59in)	-5°C up to +55°C (+23°F to +131°F) with proper forced-air cooling	5%-85% Short period limit (max 96 hours): 5%-93%	1.2kW @110-120Vac 1.9kW @200-270Vac each TRPSU/AC-58-1.2k
SUB-RPSU2-MU/48, SUB-RPSU-MU/48 Power supply distribution system, with one to four DC/DC power supply modules (TRPSU/48-58-2k)	19” - 2U depth 421.5mm (16.59in)	-5°C up to +55°C (+23°F to +131°F) with proper forced-air cooling	5%-85% Short period limit (max 96 hours): 5%-93%	1.9kW, each DC/DC Power Supply module (TRPSU/48-58-2k)

This document contains JMA Wireless proprietary and/or confidential information.

6.3 - Safety Rules

Introduction

The equipment described in this technical handbook has been designed and tested in conformity of international safety standards IEC60950/EN60950 and/or IEC62368/EN62368. This equipment must be used under the responsibility of specialized personnel only.

In accordance with IEC60950/EN60950 and/or IEC62368/EN62368, adjustment, maintenance and repair of the exposed equipment shall be carried out only by qualified personnel who are aware of the hazards involved. The minimum qualifications are established in the standard.

Final installation of the systems must fulfill the EMF emission levels, as required by regulations in force.

Safety Precautions

It is essential that both operation personnel and services personnel follow generally accepted safety procedures (IEC60950/EN60950 and/or IEC62368/EN62368) - in addition to the safety precautions specified in this technical handbook - for the correct and safe use of the equipment.

Specific warnings and caution statements, where applicable, can be found throughout this technical handbook.

Warning and caution statements and/or symbols are marked on the equipment where necessary.

Caution: used to indicate the correct operation and maintenance, in order to prevent damage or destruction of equipment or other property.

Warning of danger: used to indicate the potential hazard that requires correct procedures or practices in order to avoid personal injury.

As far as the equipment safety devices are concerned:

- Periodic functional check shall be carried out on protective devices.
- Functional check shall be carried out on protective devices, when they have operated under fault conditions.
- Safety devices shall not be altered or disconnected except for replacement.
- Safety circuits shall not be modified.

Impaired Safety Protection

Whenever it is likely that safe operation is impaired, the equipment must be inoperative and secured against unintended operation.

The appropriate servicing staff authority must be informed.

For instance, the safety is likely to be impaired if the equipment fails to perform the prescribed measurements or shows visible damages.

Electrostatic Sensitive Devices

Electrostatic sensitive devices (for instance, all ICs and many other semiconductor devices) require correct protection to reduce the risk of personal injury.

Careless handling, during repair, may imply life danger.

When repairing such devices, make sure that you are connected with the same potential as the ground of the equipment by means of the right devices, for example, a GIRDLE (a wrist wrap with resistance) and a WINDING CORD to be connected to the girdle and to the relevant socket placed on the equipment.

This document contains JMA Wireless proprietary and/or confidential information.

You must also keep components and tools at this potential.

Electrolytic Capacitors

Non-solid electrolytic capacitors must not contain chemicals, which may be regarded as hazardous if incorrectly handled. Caution is necessary if the outer case is fractured.

Electric Shock

In case of electric shock, do not touch the person before breaking the circuit by means of the power supply switch. If it is not possible to break the circuit power supply, try to rescue the person by means of some insulating materials: for example, a wooden stick, a nylon cord, or a suitable service made of plastic.

NEVER TOUCH ELECTROCUTED PEOPLE WITH YOUR HAND AS LONG AS THEIR BODIES ARE SUBJECTED TO VOLTAGE. IF YOU DO, YOU TOO WOULD BE ELECTROCUTED.

Call the doctor and then immediately perform the artificial respiration as described here below:

Lay the patient on their back with their arms parallel to their body; if the patient lies on an inclined plane, please make sure that their stomach is slightly lower than their breast. Open the patient's mouth and check for the presence of foreign bodies.

Kneel down near the patient at the same level as their head, then put one of your hands under their head and the other one under their neck. Lift the patient's neck and let their head fall backwards as far as possible.

Shift your hand from the patient's neck to their chin; put your thumb between their chin and their mouth, put your forefinger along their jawbone, and keep your other fingers tight. Start the self-oxygenation by deep breathing in standing open-mouthed. With your thumb between the patient's chin and their mouth, keep the patient's lips closed and blow into their nasal cavities.

During these operations see if the patient's breast rises. If not, their nose may be obstructed; in this case, by levering on their chin with your hand, open the patient's mouth, put your lips on and blow into their oral cavity. Look at the patient's breast and see if it rises. One can also use this second method if the patient's nose is not obstructed, as long as their nose be occluded by squeezing their nostrils with your hand after shifting it from their head. The patient's head must be kept bent backwards as far as possible.

Start with 10 fast and deep expirations, then go on at the rhythm of 12 to 15 expirations per minute. Continue as long as the patient has recovered consciousness, or until a doctor has ascertained their death.

This document contains JMA Wireless proprietary and/or confidential information.

Burns

For burns:

- Do not try to take off clothes from the burnt parts.
- Pour some cold water on body burnt areas and ask immediately for a doctor.
- Do not apply ointments or oily tinctures.

6.3.1 - Annex

When the equipment or the modules are equipped with the labels shown here below, it is essential to observe the warnings contained:

- Live Voltage Point

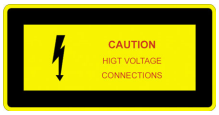

- Protective Earthing Terminal
  Connect the equipment to the nearest ground reference location, before connecting power supply. The protective earthing terminal can be identified by this symbol: ⏚

- Caution! Shock hazard! Disconnect all power sources

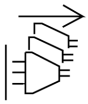

- Caution! High touch current. Connect to earth before connecting to supply.

- Class 1 Laser Product

Products which are of Class 1 invisible radiation, as defined in the IEC/EN 60825-1:2014 “Safety of laser products - Part 1: Equipment classification, requirements and user’s guide”.

The product has been classified according to the IEC/EN 60825-1:2014 standard with:

  - maximum output of laser radiation: 15mW
  - type of emission: continuous
  - optical emitted wavelength: 1310nm (second window), 1490-1570 nm (third window)

This document contains JMA Wireless proprietary and/or confidential information.

Note: Even if the product is of CLASS 1, please observe the following safety procedures, prescribed in the cited norm:

- do not observe directly the laser beam,
- do not use observation optics (lens, microscopes, telescopes, etc.),
- do not expose eyes directly.

- Hot surface

Warning: Do not touch the surface. Contact with the surface may cause burns. Allow the surface to cool before servicing.

- Devices sensitive to the electrostatics

Caution: Observe due precautions in handling devices which are sensitive to the electrostatics.

- Non-solid electrolytic capacitors may contain chemicals to be regarded as hazardous, if incorrectly handled.

Warning:
Maximum caution is required if the outer case is fractured.

6.4 - Warnings and Caution Statements

This section supplements the installation guide safety rules, providing a list of the warnings and caution statements that can be found throughout this installation guide.

Next Generation Components (Optical Transceivers, Point-to- Point Master and Secondary Rack-mount Units)

The Next Generation Optical Transceivers and Point-to- Point Master and Secondary Rack-mount Units contain a non-replaceable battery so observe the following precautions:

- During use, storage, or transportation of the equipment, do not subject the battery to extreme conditions, such as:
  - An extremely high temperature surrounding environment.
    Note: The allowable temperature range is -40 to +85°C.
  - An extremely low air pressure.

  Exposing the battery to extreme conditions can result in an explosion or the leakage of flammable liquid or gas.
- Disposal of the battery into fire or a hot oven, or mechanically crushing or cutting of the battery, can result in an explosion.

Supervision Module

- **Warning:** The supervision module contains a non-replaceable battery so observe the following precautions:
  - During use, storage, or transportation of the equipment, do not subject the battery to extreme conditions, such as:
    - An extremely high temperature surrounding environment.
      Note: The allowable temperature range is -30 to +80°C.
    - An extremely low air pressure.

    Exposing the battery to extreme conditions can result in an explosion or the leakage of flammable liquid or gas.
  - Disposal of the battery into fire or a hot oven, or mechanically crushing or cutting of the battery, can result in an explosion.

Installation

- A correct system installation and setting procedure requires a good knowledge of and experience in installing telecommunication equipment.
- To ensure proper installation and configuration, these activities should be performed by skilled and experienced personnel only.
- Before you install the equipment, carefully read the safety rules attached to this document. See "Safety Rules" on page 120.
- Before you start work on any equipment, make sure it is isolated from its power supply source.
- If not approved by JMA, repainting any components of the DAS voids the warranty.
- The equipment is intended to be installed in a Restricted Access Location (RAL) where the equipotential bonding has been applied. RAL is defined as a location for equipment where both of

This document contains JMA Wireless proprietary and/or confidential information.

the following conditions apply:

- Access can be gained only by SERVICE PERSONS or by USERS who have been instructed about the reasons for the restrictions applied to the location and about any precautions that shall be taken.
- Access is gained using a TOOL or lock and key, or other means of security, and is controlled by the authority responsible for the location.

- In Denmark, Finland, Norway and Sweden, the equipment intended for connection to other equipment, or a network shall have a marking stating that the equipment must be connected to an earthed mains socket outlet.

  In Finland: "*Laite on liitettävä suojakoskettimilla varustettuun pistorasiaan*".
  In Norway: "*Apparatet må tilkoples jordet stikkontakt*".
  In Sweden: "*Apparaten skall anslutas till jordat uttag*".
  In Denmark: "*Apparatets stikprop skal tilsluttes en stikkontakt med jord, som giver forbindelse til stikproppens jord*".
- The master unit housed inside a cabinet must be installed within a restricted access area only. This area must be protected by a security system that will exclude the entry, even if accidental, to unauthorized and untrained personnel. Alternatively, the cabinet in which the equipment is housed must be closed on all sides to allow the access to internal parts to authorized personnel only.

Caution: A cabinet cooling forced air ventilation system, able to provide an air flow of up to 180cfm ($5m^3$/min), is required to ensure the proper operation of equipment installed in a cabinet.

Installing Master Units

- **Note:** The Master unit components must be installed indoors or inside outdoor cabinets.
- Before you install the master unit components inside the cabinet, fasten the cabinet to the site floor to prevent it from turning over.
- Before installation, make sure that all the components of the system are isolated from the main power supply.

Connections

- Ethernet or coaxial ports that use a shielded cable must be shielded and grounded at both ends.
- Bare conductors must be coated with antioxidant before crimp connections are made.
- Verify that the intra-building port(s) of the equipment or subassembly are suitable for connection to intra-building or unexposed wiring or cabling only. The intra-building port(s) of the equipment or subassembly ***must not*** have metallic connections to interfaces that connect to the OSP or its wiring. These interfaces are designed for use as intra-building interfaces only (Type 2 or Type 4 ports as described in GR-1089-CORE, Issue 6) and require isolation from the exposed OSP cabling. The addition of primary protectors is insufficient protection for metallic connections between these interfaces and OSP wiring.
- The installer should never connect an antenna to the master unit *BTS* port.

Optical Connections

Caution: Fiber optic devices are sensitive to static electricity.

Warning: When handling fiber optic devices, observe the following precautions:

This document contains JMA Wireless proprietary and/or confidential information.

- Never stare directly into fiber optic connectors and fibers. Invisible emitted laser beams can damage your eyes.
- Always cover optical connectors, adapters, and optical ports with caps to prevent dust from accumulating on the interface. Remove fiber optic protective caps prior to making connections.
- Optical connections must be made with care to avoid damaging the optical fiber or connectors.
- Do not bend fiber optic cable with a tight radius of curvature; the cable might be damaged and losses within the fiber might occur.
- Before mating fiber optic connectors, inspect and clean the connectors and optical ports to ensure optimized performance. Dirty connector interfaces can cause degradation of optical signal. You can inspect connectors using a fiber optic microscope (optical fiber scope) to detect scratches, dirt, dust, and other contaminants on optical connector end faces.

  Before inspection, always turn off the laser source. Never inspect a fiber while looking into it or connecting it to a fiber scope while the laser is on.

Connecting AC and DC Power

- Before you start work on any equipment, make sure it is isolated from the power supply source.
- Make sure that the power supply source provides the nominal voltage prescribed.
- Before you make electrical connections, ground all active sub-racks and rack-mount units equipped in the master unit.
- Equipment shall be connected to an earthed socket-outlet. Earthing connection of the socket-outlet requires verification by a skilled person.

Connecting AC Power

- **TPSU/AC-30-1K, TPSU/AC, and Remote Power Supply Distribution System:** Since the plug on the power supply cord is intended to serve as the disconnect device, the socket-outlet shall be installed near the equipment and shall be easily accessible.
- **TPSU/AC:** High touch current. The value of the touch current is 2.2mA for each TPSU/AC module installed in the system.
- The equipment can be connected to an IT power distribution system.

AC Power Supply Cord Requirements

- If it is necessary to fit an AC power supply plug to a power cable, you must observe the standard wire coloring in the country of installation.

  You must also ensure that the protective earth wire would be the last to break if the cable is subject to excessive strain.
- The detachable AC power supply cord set shall be no lighter than light PVC sheathed flexible cord (H03VV-F) for indoor installation and rubber (H07RN-F) or PVC (SJTW, for the United States and Canada only) for outdoor installation, according to IEC60227, UL 817 for the United States, and CSA C22.2 No.21 for Canada.
- The detachable AC power supply cord set shall comply with the following requirements:
  - nominal voltage 240Vac
  - maximum operating temperature ≥ 60°C (140°F)

This document contains JMA Wireless proprietary and/or confidential information.

- For US/Canada market:
  - Minimum cord length is 1.5m.
  - If used in ITE Rooms, power supply cords must be no longer than 4.5m.
  - Flexible power supply cords must be compatible with Article 400 of the NEC and Tables 11 and 12 of the CEC.
  - Power supply cords for outdoor equipment must be suitable outdoor use type as required by Section 400.4 of the NEC and Rule 4-012 of the CEC, that is, marked water resistant, outdoor, W or W-A.
  - Power supply cords must have attachment plugs rated not less than 125 percent of the rated current of the equipment.

Connecting DC Power

- When installing the DC power supplied equipment, the positive terminal of the DC mains supply must be connected to protective earth, Common DC Return (DC-C) configuration.
- According to the manufacturer, the master unit DC power supply module shall be installed in an isolated secondary circuit, which is separated from primary circuit by Reinforce or Double insulation.
- **TPSU/48:** It is necessary to provide an external protective device from overcurrent (10A, 250Vdc).The protective device should be compliant with the standards of the country of installation.
- **TPSU/48-30-1K**
  - The Vdc input connector is the means to disconnect the equipment from d.c. mains supply. Remove it to disconnect the equipment from power supply source before operation.
  - It is necessary to provide an external protective device from overcurrent (50A, 250V).The protective device should be compliant with the standards of the country of installation.
  - Regarding resistance of earthing conductors, the manufacturer declares that the equipment is tested with 48A of test current for 1 minute, applied between the protective earthing terminal and accessible conductive parts.
  - The ACTRONIC AR35.40.135 power supply filter, or an equivalent type, shall be installed between the equipment Vdc input and the DC power source, in order to achieve compliance with the conducted emission limits.
  - The FAIR-RITE PRODUCTS CORP. model 0431176451 snap ferrite, or an equivalent type, shall be installed near the equipment Vdc input, in order to achieve compliance with the radiated emission limits.
- **Remote Power Supply Distribution System**
  - The Vdc input connector is the means to disconnect the equipment from d.c. mains supply. Remove it to disconnect the equipment from power supply source before operation.
  - It is necessary to provide an external protective device from overcurrent (50A, 250V). The protective device should be compliant with the standards of the country of installation.
  - Regarding resistance of earthing conductors, the manufacturer declares that the equipment is tested with 48A of test current for 1 minute, applied between the protective earthing terminal and accessible conductive parts.

This document contains JMA Wireless proprietary and/or confidential information.

- **Next Generation Components (Optical Transceivers, Point-to- Point Master and Secondary Rack-mount Units)**
  - The equipment is intended and designed to be connected to a DC power source with a maximum transient voltage up to 1.5kV.
- **DC Power Supply Cord Requirements**
  - The color of the wires inside the power cord should be compliant with the standard wire coloring in the country of installation.
  - The detachable DC power supply cord set must meet the requirements for indoor or outdoor use, in accordance with the standards of the country of installation.
  - The detachable DC power supply cord set shall comply with the following requirements:
    - nominal voltage 72Vdc
    - maximum operating temperature ≥ 75°C (167°F)
  - For US/Canada market:
    - Minimum cord length is 1.5m, with certain constructions (such as external power supplies) allowed to consider both input and output cord lengths into the requirement.
    - Power supply cords must be no longer than 4.5m, if used in ITE Rooms.
    - Flexible power supply cords must be compatible with Article 400 of the NEC and Tables 11 and 12 of the CEC.
    - Power supply cords for outdoor equipment must be suitable outdoor use type as required by Section 400.4 of the NEC and Rule 4-012 of the CEC, that is, marked water resistant, outdoor, W or W-A.
    - Power supply cords must have attachment plugs rated not less than 125 percent of the rated current of the equipment.
- **Replacement of Faulty Components**
  - It is important that before you start work on any equipment, you read the "Safety Rules" on page 120.
  - **Warning: Hot surface**

    Warning: Do not touch the surface. Contact with the surface may cause burns. Allow the surface to cool before servicing.

This document contains JMA Wireless proprietary and/or confidential information.

6.5 - Règles de sécurité

Introduction

L'équipement décrit dans ce manuel technique a été conçu et examiné dans la conformité des normes de sécurité internationales IEC60950/EN60950 et/ou IEC62368/EN62368; l'équipement doit être utilisé sous la supervision du personnel spécialisé seulement.

Selon IEC60950/EN60950 et/ou IEC62368/EN62368, l'ajustement, le réglage et la réparation de l'équipement exposé doivent être effectués seulement par le personnel qualifié, qui sont conscients des risques impliqués. Les qualifications minimum sont établies dans la norme.

L'installation finale des systèmes doit satisfaire les niveaux d'émission d'EMF, comme en a été demandé par les règlements en vigueur.

Consignes de sécurité

Pour une utilisation correcte et sure du dispositif il est très importante que soit le personnel opérante soit le personnel de service suivent les procédures de suréte acceptées (IEC60950 / EN60950 et/ou IEC62368/EN62368) en autre aux mesures de sureté indiqués dans le présente manuel technique.

Admonitions spécifiques et avertissements de prudence, si applicables, se trouvent dans ce manuel.

***Précaution**, **Prudence**: on l'utilise pour indiquer le fonctionnement et l'entretien correcte afin d'éviter d'endommager ou détruire le dispositif ou autre propriété.*

***Mises en garde**, **Admonitions de danger**: utilisé pour indiquer une risque potentiel qui demande correctes procédures ou pratiques pour éviter dommages à la personne.*

Sur les points nécessaires on a indiqué les symboles qui tirent l'oeil et avertissements de précaution.

En ce qui concerne les dispositifs de sécurité de l'équipement s'il vous plait rappelez-vous cela:

- *des contrôles fonctionnels périodiques doivent être effectués sur des dispositifs de protection;*
- *des contrôles fonctionnels doivent être effectués sur des dispositifs de protection, quand ils ont fonctionné dans des conditions de panne;*
- *les dispositifs de sécurité ne doivent pas être changés ou déconnectés sauf pour le remplacer;*
- *le circuit de sécurité ne doit pas être modifié.*

Réduite protection de sureté

Dans les cas où le fonctionnement de sureté est probable que a faibli, le dispositif doit etre inopérant et le fonctionnement involontaire doit etre évité.

On devra infomer de ca la direction du personnel de servise du dispositif en objet.

Par example, la sureté peut se dire faible dans le cas où les performances du dispositif ne sont pas celles prévues ou bien il présente dommages visibles.

Dispositives sensibles électrostatiques

En cas de dispositives sensibles électrostatiques (par ex. toutes circuits integrés et plusieurs autres semiconducteurs appartient à ce classe) il est importante d'utiliser la protection apte pour réduires les risques de dommages personnels.

Manoeuvres impropres ou négligents pendant la réparation peuvent comporter un danger mortale.

This document contains JMA Wireless proprietary and/or confidential information.

Pendant la réparation, il faut s'assurer d'etre branché avec le meme potential de la mise à sol du dispositif par les dispositives corrects, par ex. une GAINE (protection du poignet avec résistance) et un CABLE DE BOBINAGE, à brancher à la gaine et à la prise rélative qui se trouve dans le dispositif.

Il faut aussi garder les composants et les outils à ce potentiel.

Condensateurs électrolitiques

Les condensateurs électroitiques non solides peuvent contenir élements chimiques qui peuvent etre considerés dangereus si manipulés de facon non correcte.

Dans le cas où l'enveloppe extérieur est cassé il est nécessaire d'etre prudent.

Fulguration

En cas de fulguration éviter de toucher la personne avant d'avoir coupé le circuit par l'interrupteur de ligne; si ca n'est pas possible, le dégager en employant des matériax isolants: bâtons de bois, corde de nylon, objets de plasique.

NE PAS TOUCHER LA PERSONNE FOUDROYÉE JUSQ'A SON CORP EST SOUS-TENSION: ON PEUT RESTER FOUDROYÉ.

Démander l'intervention d'un medecin donc pratiquer promptement la respiration artificielle comme indiqué en suite:

Mettre le blessé sur le dos avec bras parallele au corps; si le blessé est étendu sur un plan incliné, s'assurer que son estomac est légèrement plus en bas que sa poitrine: Ouvrir la bouche du blessé et controller qu'il n'y a pas de corps étrangers.

S'agenouiller près du blessé au niveau de sa tete, mettre une main sous la tete et une sous le cou. Soulever le cou du blessé et en laisser retomber la tete le plus possible à l'arrière.

Déplacer la main du cou au menton du blessé;placer votre pouce entre le menton et la bouche, l'index le long de l'os machoire, tenir les autre doigts serré.Pendant ces opérations commancer l'auto-oxigenation parmi profondes inspirations à bouche ouverte. Avec votre pouce entre menton et bouche du blessé lui tenir les lèvres serrés et souffler dans la cavité nasale.

Pendant ces opérations controller si la poitrine du blessé se souleve. En cas contrair il est possible que le nez est obstrué; alors en faisant pression sur le menton avec la main, ouvrir le plus possible la bouche du blessé, mettre ses lèvres autour et souffler dans la cavité orale.controller si la poitrine du blessé se soulève. On peut utiliser ce deuxième methode au lieu du premièr meme quand le nez n'est pas obstrué, à condition que il est fermé en serrant les narines avec la main après l'avoir deplacé de la tete. La tete du blessé doit etre tenu le plus possible incliné à l'arriere.

Commencer avec dix rapide et profondes expirations, continuer donc au rythm de douze/quinze expiration par minute. Continuer jusqu'à quand le blessé reprend sa connaissance ou un medicin en constate le décès.

Brulures

En ce qui concerne les brulures:

This document contains JMA Wireless proprietary and/or confidential information.

- *Ne pas essayer de détacher les vetements dès partie brulés.*
- *Verser de l'eau et appeler d'urgence un medicin.*
- *Ne pas appliquer pommades ou teinture huileuses.*

6.5.1 - *Annexe*

Alors que le dispositif ou les modules sont equippés avec les étiquettes indiques ci-après, il est très important de suivre les indications indiqués:

- *Partie sous tension*

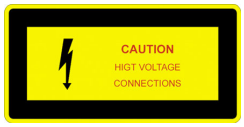

ATTENTION: connexions à haute tension

- *Extremite protectrice de mise au sol*

  Avant de brancher l'alimentation, branchez l'équipement à l'emplacement au sol le plus proche.

  Le terminal de mise au sol peut être identifié par ce symbole: ⏚

- *Mise en garde! Danger de choc! Déconnecter toutes les sources d'énergie*

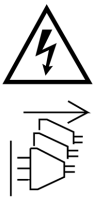

- *Mise en garde! Courant de contact élevé. Branchez à la terre avant de connecter à la source d'alimentation.*

- *Produit laser de Classe 1*

  Les produits qui sont de classe 1 rayonnements invisibles sont définies dans la norme CEI / EN 60825-1:2014 "Sécurité des appareils à laser - Partie 1: Classification des matériels, prescriptions et guide de l'utilisateur".

  Le produit a été classifié selon la norme IEC/EN 60825-1:2014 avec:

  - *production maximale de rayonnement du laser: 15mW*
  - *type d'émission : continu*

This document contains JMA Wireless proprietary and/or confidential information.

- *longueur d'onde optique émise: 1310nm (deuxième fenêtre), 1490-1570 nm (troisième fenêtre)*

Même si le produit est de classe 1, s'il vous plaît respecter les procédures de sécurité suivantes, prévues dans la norme citée:

- *ne pas observer directement le faisceau laser,*
- *ne pas utiliser l'optique d'observation (lentilles, microscopes, télescopes, etc),*
- *ne pas exposer directement les yeux.*

- *Surface chaude*

Attention: *Ne touchez pas la surface. Le contact avec la surface peut provoquer des brûlure. Laissez la surface refroidir avant tous les travaux d'entretien.*

- *Dispositives sensibles à l'électrostaticité*

ATTENTION: observer les précautions qui s'imposent pendant la manipulation des dispositives sensibles à l'électrostaticité.

- *Les condensateurs électrolitiques non solide peuvent contenir elements chimiques dangereus, dans le cas où ils ne sont as traité correctement.*

ATTENTION: on demande la précaution maximale dans le cas où l'armoir exterieur presente des fractures.

This document contains JMA Wireless proprietary and/or confidential information.

6.6 - Mises en Garde et Déclarations de Précaution

Ce document complète le manuel technique de l'équipement et les règles de sécurité, fournissant une liste des avertissements et de mises en garde qui peuvent être trouvées dans tout ce manuel technique.

Équipements de prochaine génération (transceivers à fibre optique, liaison optique point à point)

Puisque les équipements de prochaine génération (transceivers à fibre optique et liaison optique point à point) sont équipés d'une batterie intégrée non remplaçable, il faut observer les précautions de sécurité suivantes:

- *Pendant l'utilisation, le stockage ou le transport de l'équipement, la batterie ne doit pas être soumise à des conditions extrêmes, telles que:*
  - *Un environnement à très haute température.*
    La plage de températures autorisées pour la batterie est de -40 à +85°C.
  - *Une pression de l'air extrêmement faible.*

  Laisser une batterie dans un environnement soumise à des conditions extrêmes peut entraîner une explosion ou une fuite de liquide ou de gaz inflammable.
- *La mise au rebut d'une batterie dans un feu ou dans un four chaud, ou l'écrasement mécanique ou le découpage d'une batterie peut entraîner une explosion.*

Module de Supervision

Il faut observer les précautions de sécurité suivantes:

- *Pendant l'utilisation, le stockage ou le transport de l'équipement, la batterie ne doit pas être soumise à des conditions extrêmes, telles que:*
  - *Un environnement à très haute température.*
    La plage de températures autorisées pour la batterie est de -30 to +80°C.
  - *Une pression de l'air extrêmement faible.*

  Laisser une batterie dans un environnement soumise à des conditions extrêmes peut entraîner une explosion ou une fuite de liquide ou de gaz inflammable.
- *La mise au rebut d'une batterie dans un feu ou dans un four chaud, ou l'écrasement mécanique ou le découpage d'une batterie peut entraîner une explosion.*

Installation

Mise en garde

- *L'installation correcte du système et la procédure de réglage exige une bonne connaissance et expérience dans l'installation d'équipements de télécommunication.*
- *Ces activités doivent être effectuées uniquement par du personnel qualifié.*
- *Avant d'installer l'équipement, lisez attentivement les règles de sécurités attachées au manuel technique d'équipement. Voir "Règles de sécurité" on page 129.*
- *Avant de commencer à travailler sur l'équipement, il doit être isolé du réseau électrique.*
- *S'il n'est pas approuvé par JMA, repeindre les composants du DAS annulera la garantie.*

This document contains JMA Wireless proprietary and/or confidential information.

- *L'équipement est destiné à être installé dans un emplacement à accès restreint où une liaison équipotentielle de protection a été appliquée.*

  Le lieu d'accès restreint est un endroit pour les équipements où les deux conditions suivantes s'appliquent:

  - *l'accès peut seulement être acquis par des PERSONNES de SERVICE ou par les UTILISATEURS qui ont été instruits sur les raisons des restrictions appliquées à l'emplacement et sur toutes les précautions qui doivent être prises;*
  - *l'accès se fait par l'utilisation d'un outil ou d'une clé, ou d'autres moyens de sécurité, et est contrôlé par l'autorité chargée de l'emplacement.*
- *L'équipement destinée à être logée à l'intérieur d'une armoire doit être installé dans une zone à accès protégé seulement.*

  Cette zone doit être opportunément protégée par le système de sécurité qui exclura l'entrée, même fortuite, à des personnes non autorisées et non formés. Sinon, le cabinet, dans le quel l'équipement est installé, doit être fermé de tous côtés, pour autoriser l'accès aux parties internes au personnel autorisé seulement.

Précaution: *Un système de refroidissement de l'armoire par ventilation forcé, capable de fournir un flux d'air allant jusqu'à 180cfm (5m^3/min), est nécessaire pour assurer le bon fonctionnement du matériel installé dans armoire.*

Installation de l'Unité Principale

- *Lors du positionnement des subracks de l'unité principale dans une armoire, fixez l'armoire afin de l'empêcher de se tourner.*
- *Avant de commencer à travailler sur l'équipement, il doit être isolé du réseau électrique.*

Connexions

- *Les ports Ethernet / coaxiaux qui utilisent un câblé blindé doivent être blindés et mis à la terre aux deux extrémités.*
- *Les conducteurs nus doivent être recouverts d'antioxydant avant effectuer les connexions pincées.*
- *Le port (s) de l'équipement ou sous-ensemble intra-bâtiment est adapté pour le raccordement au câblage intra-bâtiment ou aux fils non exposé ou au câblage seulement. Le port (s) de l'équipement ou sous-ensemble intra-bâtiment ne doit pas être connecté métalliquement aux interfaces connectées au réseau ou à son câblage. Ces interfaces sont conçues pour être utilisées comme interfaces de intra-bâtiment seulement (type 2 ou 4 ports comme décrit dans GR-1089-CORE, numéro 6) et doivent être isolées du câblage OSP exposée. L'ajout de protecteurs primaires n'est pas une protection suffisante pour pouvoir connecter ces interfaces métallique au câblage de l'OSP.*
- *Dans tous les cas, l'installateur ne doit jamais connecter une antenne à la porte BTS de l'unité principale.*

Installation des Fibres Optiques et des Dispositifs aux Fibres Optiques

Respecter les procédures de sécurité suivantes:

- *Ne pas observer directement le faisceau laser, ne pas utiliser l'optique d'observation (lentilles, microscopes, télescopes, etc), ne pas exposer directement les yeux.*

This document contains JMA Wireless proprietary and/or confidential information.

- *Protégez toujours les connecteurs optiques et les adaptateurs avec leur bouchon pour empêcher la poussière de joindre à la face d'extrémité. Retirez les capuchons de protection de la fibre optique juste avant de faire les connexions.*
- *Avant l'inspection de la fibre, arrêtez toujours la source laser. Alors que le laser est allumé, n'inspectez jamais une fibre en la regardant directement ou en la reliant à un fibroscope.*

Alimentation d'Énergie

- *Avant de faire les connexions électriques, l'équipement doit être isolé du réseau électrique.*
- *Assurez-vous que la source d'alimentation fournit la tension nominale prescrite.*
- *Avant de faire les connexions électriques, branchez à la terre tous les subracks actifs fournis dans l'unité principale.*
- *L'équipement doit être connecté à une prise de courant reliée à la terre. Mise à la terre de la prise de courant doit être vérifiée par du personnel qualifié.*

Alimentation en Courant Alterné (AC)

- ***TPSU/AC-30-1K, TPSU/AC, SUB-RPSU2-MU/AC, SUB-RPSU-MU/AC:*** *Puisque la prise sur la corde d'alimentation d'énergie est prévue pour servir les dispositifs de débranchement, la prise de courant doit être installée près de l'équipement et doit être facilement accessible.*
- ***TPSU/AC:*** *Courant de contact élevé. Le courant de contact est de 2,2mA pour chaque module TPSU/AC installé dans le système.*
- *L'équipement peut être installé dans un système de distribution IT.*
- ***Cordon d'Alimentation AC***
  - *S'il est nécessaire de connecter une prise d'alimentation AC à le câble d'alimentation, l'utilisateur doit respecter les codes de couleur de fil standard dans le pays d'installation.*

    L'utilisateur doit également s'assurer que le fil de protection de terre soit le dernier à se rompre si le câble est soumis à une contrainte excessive.
  - *L'ensemble de cordon d'alimentation détachable AC ne doit pas être plus léger que le cordon flexible engainé léger par PVC (H03VV-F) pour une installation à l'intérieur et en caoutchouc (H07RN-F) ou en PVC (SJTW, pour les États-Unis et le Canada uniquement) pour installation à l'extérieur, selon IEC60227, UL 817 pour les États-Unis et CSA C22.2 No.21 pour le Canada.*
  - *L'ensemble du cordon d'alimentation détachable AC doit se conformer aux exigences suivantes:*
    - *tension nominale de 240Vac*
    - *température de fonctionnement maximale ≥ 60°C (140°F)*
  - *Pour les États-Unis et le Canada:*
    - *La longueur minimum du cordon est tenue d'être de 1,5 m.*
    - *Les cordons d'alimentation ne doivent pas dépasser 4,5 m de longueur, s'ils sont utilisés dans les salles d'équipement informatique (ITE).*
    - *Les cordons d'alimentation souples doivent être compatibles avec l'article 400 de la NEC, et les tableaux 11 et 12 de la CEC.*

This document contains JMA Wireless proprietary and/or confidential information.

- *Les cordons d'alimentation doivent être adaptés à l'utilisation en plein air tel que requis par l'article 400.4 du NEC et par l'article 4-012 de la CEC, marquée résistant à l'eau, en plein air, W ou W-A.*
- *Les cordes d'alimentation sont exigées d'avoir des prises d'attachements notés au moins 125 pour cent du courant nominal de l'équipement.*

Alimentation en Courant Continue

- *Lors de l'installation de l'équipement avec alimentation DC, la borne positive d'alimentation DC doit être reliée à la terre dans la configuration Common DC Return (DC-C).*
- *Selon le fabricant, le module d'alimentation DC de l'unité principale doit être installé dans un circuit secondaire isolé qui est séparé du l'unité principale par une isolation renforcée ou double.*
- ***TPSU/48:** Il est nécessaire de prévoir un dispositif de protection externe contre la surintensité (10A, 250V). Le dispositif de protection doit être conforme aux normes du pays d'installation.*
- ***TPSU/48-30-1K***
  - *Le connecteur d'entrée Vdc est le moyen de déconnecter l'équipement de l'alimentation électrique du courant continu (d.c.). Retirez-le pour débrancher l'équipement de la source d'alimentation avant l'opération.*
  - *Il est nécessaire de prévoir un dispositif de protection externe contre la surintensité (50A, 250V). Le dispositif de protection doit être conforme aux normes du pays d'installation.*
  - *En ce qui concerne la résistance des conducteurs de mise à la terre, le fabricant déclare que l'équipement est testé avec 48A de courant de test pendant 1 minute, appliqué entre la borne de mise à la terre de protection et les parties conductrices accessibles.*
  - *Le filtre d'alimentation ACTRONIC AR35.40.135, ou un type équivalent, doit être installé entre l'équipement Vdc d'entrée et la source de courant continu (DC), afin d'assurer la conformité avec les limites d'émissions réalisées.*
  - *Il faut que la ferrite à clipser FAIR-RITE PRODUCTS CORP. modèle 0431176451, ou un type équivalent, soit placée près de l'input Vdc du composant, afin d'être en conformité avec les limites concernant les émissions rayonnées.*
- ***SUB-RPSU2-MU/48, SUB-RPSU-MU/48***
  - *Le connecteur d'entrée Vdc est le moyen de déconnecter l'équipement de l'alimentation électrique du courant continu (d.c.). Retirez-le pour débrancher l'équipement de la source d'alimentation avant l'opération.*
  - *Il est nécessaire de prévoir un dispositif de protection externe contre la surintensité (50A, 250V). Le dispositif de protection doit être conforme aux normes du pays d'installation.*
  - *En ce qui concerne la résistance des conducteurs de mise à la terre, le fabricant déclare que l'équipement est testé avec 48A de courant de test pendant 1 minute, appliqué entre la borne de mise à la terre de protection et les parties conductrices accessibles.*
- ***Équipements de prochaine génération***
  - *L'équipement est destiné et conçu pour être connecté à une source d'alimentation DC avec une tension transitoire maximale jusqu'à 1,5kV.*

This document contains JMA Wireless proprietary and/or confidential information.

- ***Cordon d'Alimentation DC***
  - *La couleur des fils à l'intérieur du cordon d'alimentation doit être conforme à la couleur de fil standard dans le pays d'installation.*
  - *L'ensemble du cordon d'alimentation amovible DC doit être agréé et en conformité avec les normes de sécurité en vigueur dans le pays d'installation, pour une utilisation en plein air ou en intérieur.*
  - *L'ensemble du cordon d'alimentation amovible DC doit satisfaire aux exigences suivantes:*
    - *tension nominale de 72Vdc*
    - *température de fonctionnement maximale ≥ 75°C (167°F)*
  - *Pour les États-Unis et le Canada:*
    - *La longueur minimum du cordon est tenue d'être de 1,5 m, dans certaines constructions les longueurs du fils d'alimentations externes autorisées à l'entrée et à la sortie doivent être considérées dans l'exigence.*
    - *Les cordons d'alimentation ne doivent pas dépasser 4,5 m de longueur, s'ils sont utilisés dans les salles d'équipement informatique (ITE Rooms)*
    - *Les cordons d'alimentation souples doivent être compatibles avec l'article 400 de la NEC, et les tableaux 11 et 12 de la CEC.*
    - *Les cordons d'alimentation doivent être adaptés à l'utilisation en plein air tel que requis par l'article 400.4 du NEC et par l'article 4-012 de la CEC, marquée résistant à l'eau, en plein air, W ou W-A.*
    - *Les cordes d'alimentation sont exigées d'avoir des prises d'attachements notés au moins 125 pour cent du courant nominal de l'équipement.*
- ***Remplacement des Composants***
  - *Avant de remplacer des composants, lisez attentivement les règles de sécurités attachées au manuel technique d'équipement. Voir "Règles de sécurité" on page 129.*
  - ***Attention: Surface chaude***

    Attention: *Ne touchez pas la surface. Le contact avec la surface peut provoquer des brûlure. Laissez la surface refroidir avant tous les travaux d'entretien.*

This document contains JMA Wireless proprietary and/or confidential information.

6.7 - Symbols and Manufacture Labels Affixed to the Product

- **Symbols**

Symbol	Description
	Protective earthing terminal
	Direct Current (DC)
	Alternating Current (AC)
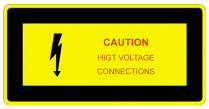	Live Voltage Point
	Live Voltage Point
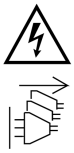	Caution! Shock hazard! Disconnect all power sources
	Caution! High touch current. Connect to earth before connecting to supply.
	Class 1 Laser Product
	Hot surface. Do not touch the surface. Contact with the surface may cause burns. Allow the surface to cool before servicing.
	Devices sensitive to the electrostatics
	Non-solid electrolytic capacitors
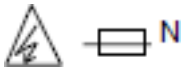	Caution. Neutral fusing.

Manufacture Labels

All products are identified by a bar code label.

The following table provides a description of the bar code label fields.

Field	Description
A	Serial number of the module or equipment
A1	Encoded serial number of the module or equipment
B	Equipment acronym or manufacture part number
B1	Encoded equipment acronym or manufacture part number
C	CF (final test tracing out): when checked certifies that the item has been successfully tested in the Factory Final Test Dept.

This document contains JMA Wireless proprietary and/or confidential information.

Abbreviations

AGC
Automatic Gain Control

BS
Base Station

CPRI
Common Public Radio Interface

DAS
Distributed Antenna System

DE
Digital Electricity

DL
Downlink

DWDM
Dense Wavelength Division Multiplexing

EU
European Union

ITE
Information Technology Equipment

LAN
Local Area Network

LMT
Local Maintenance Terminal

LTE-TDD
Time-Division Long-Term Evolution

MU
Master Unit

NEM
Network Element Manager

This document contains JMA Wireless proprietary and/or confidential information.

PDU

Power Distribution Unit

PoI

Point of Interface

PSU

Power Supply Unit

RAL

Restricted Access Location

RU

Remote Unit

SDRU

Software Defined Remote Unit

SFP

Small Form Factor Pluggable

TDFE

Digital Donor Front End

UK

United Kingdom

UL

Uplink

UPS

Uninterruptible Power Supply

WAN

Wide Area Network

WDM

Wavelength Division Multiplexing

This document contains JMA Wireless proprietary and/or confidential information.